XXX

序号	区域	上版内容	本版内容
1	/	/	/
2	/	/	/

技术要求:
1.成品尺寸:A5;
2.封面及内页全部用80g双胶纸;
3.按图纸1:1制作,线条图案清晰,边沿光滑,版面端正,无明显色差;
4.灰度印刷;
5.线条图案清晰,边沿光滑,版面端正,无明显色差;
6.成品须符合国标文件《GB/T 31269-2023》要求。

标记	处数	分区	更改文件号	签名	日期	阶段标记			比例
设计			陈协影	校对	万秀松	REV	00		1:1
审核			邓鹏	审定	黄庆文	数量		重量	
工艺			麦永俊	批准	温炯	1		kg	
标准化			杨雪	日期	2025.1.1	共1张		第1张	

说明书
(WQP12-E110)

XXX

80g双胶纸

佛山市百斯特电器科技有限公司

aspes

USER MANUAL
DISHWASHER

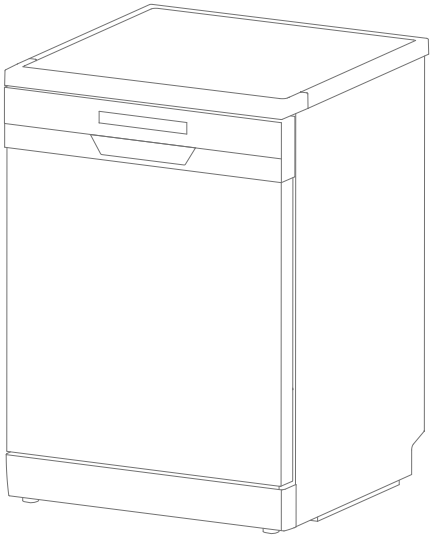

AJ14602DD
AJ14602DDX

Read this manual carefully and keep it for future reference.

CONTENTS

SAFETY A

Important safety instruction A1

INSTALLATION B

Product overview B1
Installation dimensions B2
Inlet hose & drain hose B3
Install into the cabinet B4
Inlet & drain water B5
Adjustment & inspection B6

HOW TO USE C

Consumables C1
Loading basket C2
Operation C3
Cleaning and maintenance C4

TECHNICAL SUPPORT AND CUSTOMER SERVICE D

Error code D1
Trobleshooting D2
Technical data D3
Statement D4
Customer service D5

⚠ Warning

There are some important safety instructions in this manual, Please read carefully before installing and using.

▶ This appliance can only be used to wash household utensils, and is intended to be used in household and similar applications.

▶ The dishwasher will be damaged or the user will be injured when the operation is wrong.

▶ Please contact the after-sales service department immediately if the appliance breaks down. Do not reassembly or fix the appliance by yourself.

▶ Please contact the after-sales service department or the maintenance department that vendor assigned for fixing or displacing if the power cord is damaged.

▶ The power source of dishwasher has to adopt earth line for safe.

▶ To avoid electric shock, ensure the appliance is connected to a properly earthed power supply.

▶ Never connect the power cord in stormy weather.

▶ After installation, please make sure the connection of water and power well connected before using.

▶ The allowable height for the drain hose installation (measured from the bottom of the appliance) is 40~60 cm.

▶ Knives and other utensils with sharp points must be loaded in the basket with their points down or placed in a horizontal position.

▶ This dishwasher is an automatic appliance, do not add water manually when the appliance is working. It will cause overflow and dangerous.

▶ Do not move or clean appliance when it is working. It might cause electrical or water leakage.
▶ Do not open the door during operation as the steam will hurt you. If it is necessary to load or unload some utensils, please push pause button and wait 10 seconds, then open the door slightly and wait for the steam dissipate completely, then open the door and move your utensils.
▶ Please use specialized detergents. Do not use washing-up liquid, washing powder, hand sensitizer soup or others detergents that not specialized for dishwasher.
▶ There are some cable ties on the drainage pipe and power cord, please use flat scissor to cut the ties. Sharp scissor might burst the pipe and cord and cause leakage.
▶ Do not try to use this appliance in damp place. High humidity will make the appliance rust, even leakage.
▶ The specialized detergent should be put on the place where kids can not reach. because the detergents are contains acidoid and alkaline, which are really dangerous to kids.
▶ Utensils will be hot after washing, please take it out after 30 minutes.
▶ In winter, allow the dishwasher to sit at room temperature for at least 8 hours after delivery before first use. This prevents condensation from forming on internal components, which could cause electrical damage or corrosion.
▶ The appliance is to be connected to the water mains using new hose-sets and that old hose-sets should not be reused.
▶ During installation, the power supply must not be excessively or dangerously bent or flattened.
▶ The allowable height for the drain hose installation (measured from the bottom of the appliance) is 40~60

cm.Please use flat scissors to cut the tie of water pipes and power lines when unpacking boxes.

▶ Position the appliance in the desired location. Confirm that the machine has been leveled.

▶ Please don't put anything else on either side, The openings must not be obstructed by a carpet.

▶ Please use cold water or warm water not exceeding 50°C.

▶ This appliance is not intended for use by persons (including children) with reduced physical, sensory or mental capabilities, or lack of experience and knowledge, unless they have been given supervision or instruction concerning use of the appliance by a person responsible for their safety.

▶ Children should be supervised to ensure that they do not play with the appliance.

▶ If the supply cord is damaged, it must be replaced by the manufacturer, its service agent or similarly qualified persons in order to avoid a hazard.

▶ The door should not be left in the open position since this could present a tripping hazard. Please keep kids stay away from the dishwasher, especially when the door open.

▶ This appliance can be used by children aged from 8 years and above and persons with reduced physical, sensory or mental capabilities or lack of experience and knowledge if they have been given supervision or instruction concerning use of the appliance in a safe way and understand the hazards involved.

▶ The maximum number of place settings to be washed is 15.

▶ The maximum permissible inlet water pressure is 1.00 MPa.

▶ The minimum permissible inlet water pressure is 0.04 MPa, to ensure the proper functioning of the appliance.

▶ After using the appliance, please cut off the power and water.

▶ WARNING: Knives and other utensils with sharp points must be loaded in the basket with their points down or placed in a horizontal position. When using your dishwasher, follow basic precautions, including the following:

a) Read all instructions before using the dishwasher.

b) Use the dishwasher only for its intended function.

c) Use only detergents or wetting agents recommended for use in a dishwasher and keep them out of the reach of children.

d) When loading items to be washed:

1. Locate sharp items so that they are not likely to damage the door seal;
2. Load sharp knives with the handles up to reduce the risk of cut-type injuries.

e) Do not wash plastic items unless they are marked "dishwasher safe" or the equivalent. For plastic items not so marked, check the manufacturer's recommendations.

f) Do not touch the heating element during or immediately after use.

g) Do not operate your dishwasher unless all enclosure panels are properly in place.

h) Do not tamper with controls.

i) Do not abuse, sit on, or stand on the door or dish rack of the dishwasher.

j) To reduce the risk of injury, do not allow children to play in or on a dishwasher.

k) Under certain conditions, hydrogen gas might be produced in a hot-water system that has not been used for two weeks or more.

HYDROGEN GAS IS EXPLOSIVE. If the hot-water system has not been used for such a period, before using the dishwasher turn on all hot-water faucets and let the water flow from each for several minutes. This will release any accumulated hydrogen gas. As the gas is flammable, do not smoke or use an open flame during this time.

l) Remove the door to the washing compartment when removing an old dishwasher from service or discarding it.

Keep a gap of 5 cm on each side between the appliance and furniture or walls to prevent them from heating up.

GROUNDING INSTRUCTION

▶ This appliance must be grounded. In the event of a malfunction or breakdown, grounding will reduce the risk of an electric shock by providing a path of least resistance of electric current. This appliance is equipped with a cord having an equipment-grounding conductor and a grounding plug.

▶ The plug must be plugged into an appropriate outlet that is installed and grounded in accordance with all local codes and ordinances.

▶ Improper connection of the equipment-grounding conductor can result in a risk of electric shock.

▶ Check with a qualified electrician or service representative if you are in doubt whether the appliance is properly grounded. Do not modify the plug provided with the appliance; If it will not fit the outlet, have a proper outlet installed by a qualified electrician.

▶ Please do not use power strip.

DISPOSAL OF PACKAGING AND PRODUCT



Dispose of packaging in an environmentally-friendly manner.This appliance is labelled in accordance with European Directive 2012/19/EU concerning used electrical and electronic appliances (waste electrical and electronic equipment - WEEE). The guideline determines the frame work for the return and recycling of used appliances as applicable throughout to the EU.

PACKAGE INFORMATION:

Packaging materials of the product are manufactured from recyclable materials in accordance with our National Environment Regulations. Do not dispose of the packaging materials together with the domestic or other wastes. Take them to the packaging material collection points designated by the local authorities.

1.Parts and features

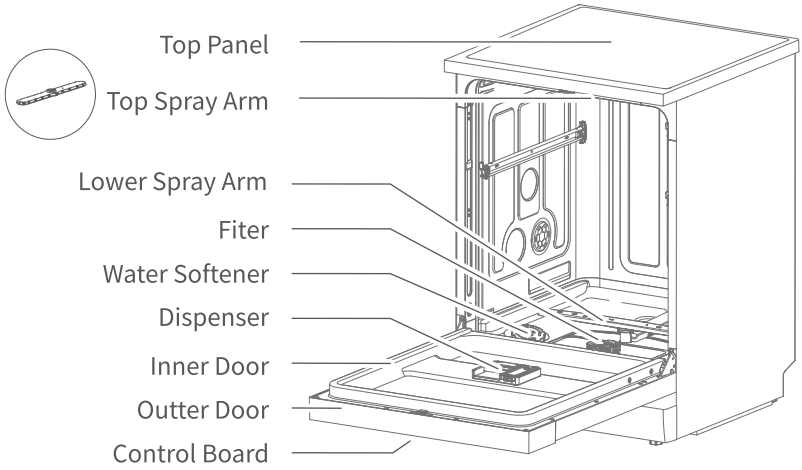

Top Rack

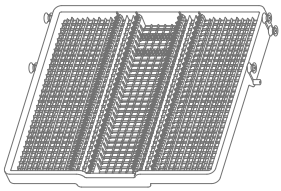

Upper Rack

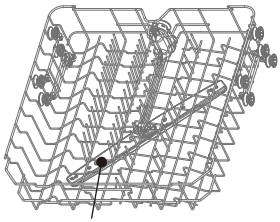

Upper Spray Arm

Lower Rack

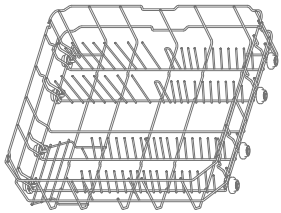

2.Accessories



Inlet Hose X1



Funnel x1

Note: The illustration is a reference image, your device may differ.

1.With top panel

unit:mm

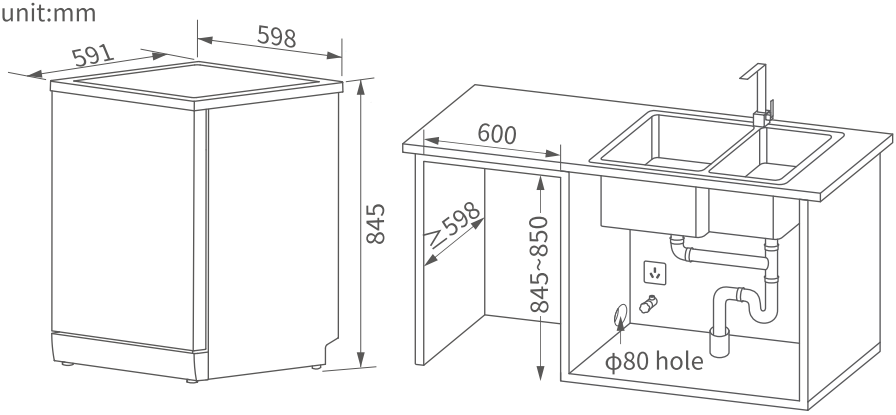

2.Without top panel

unit:mm

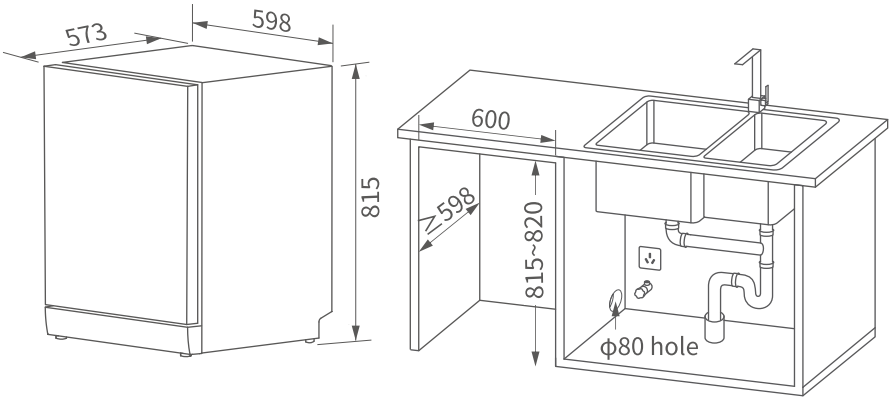

WARNING

▶ The dishwasher must not be placed on a table.
▶ The dishwasher with a top panel can be used for freestanding or built-in installation.
▶ The dishwasher without a top panel can only be used for built-in installation.
▶ The height of the cabinet hole should not exceed the height of the dishwasher by more than 5mm.
▶ Make sure there is no flammable and explosive material near dishwasher.
▶ No gas hose, rubber hose go through the installation place except iron pipe.

3.Remove the top panel

The top panel can be removed if the cabinet opening height is insufficient.
1. Remove the two screws at the top rear of the dishwasher. Please store the removed screws and top panel properly for future use.
2. Pull the top panel backward and then lift it to remove.

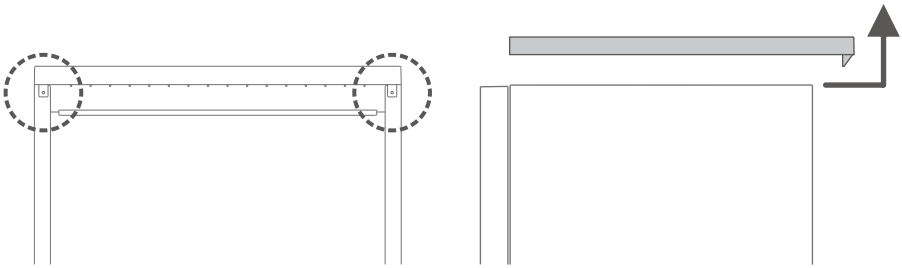

INLET HOSE & DRAIN HOSE

B3

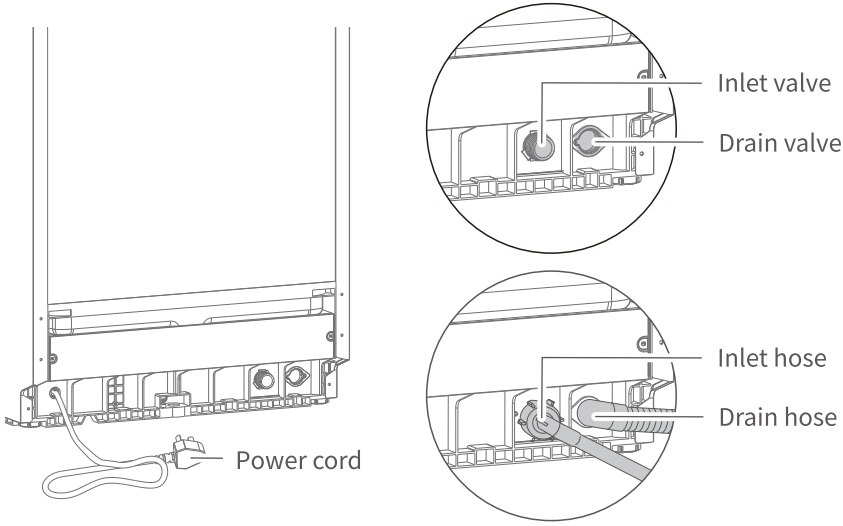

INSTALL INTO THE CABINET

If you choose a built-in installation, you must provide your own steam-resistant sticker. Stick the sticker on the top of the hole in cabinet.

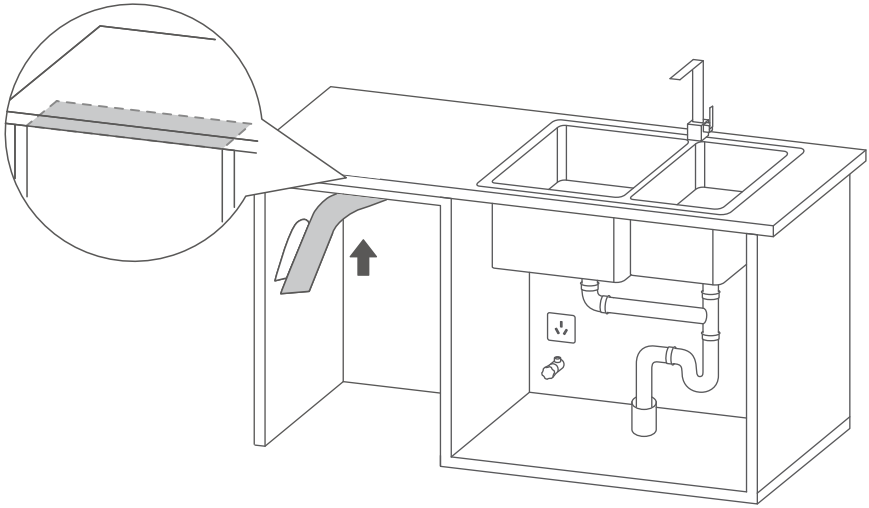

Push the dishwasher into the cabinet. At the same time the power cord, inlet hose, and the drain hose should pass through the designated entrance and exit holes. Make sure they are not folded.

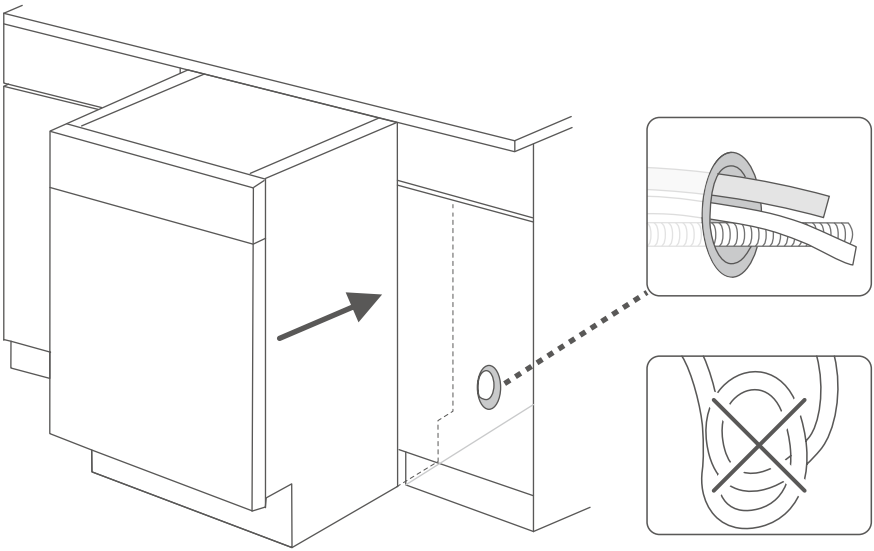

1.Inlet water

Ensure that the inlet hose is connected to the connection properly secured.

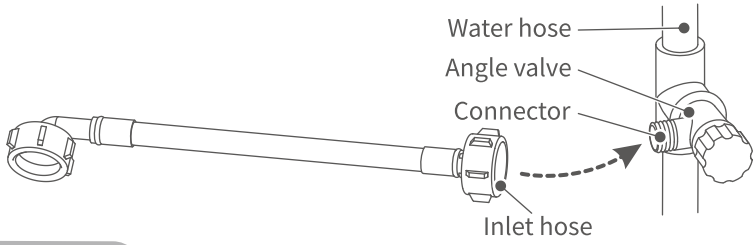

2.Drain water

▶ Insert the drain hose into the drain port at least 100mm in case of the hose out of the port when draining the water.
▶ The drain hose can not be folded and compression deformation to keep draining water smoothly.
▶ If the drain is too long when install or repair the dishwasher, the hose can be cut according to the real state with the agreement from user.
▶ The drain hose can not be folded, if extension is needed, do not exceed 5 meters, otherwise may affect the washing effect.
▶ The drain port need to have the overflow resisted step.

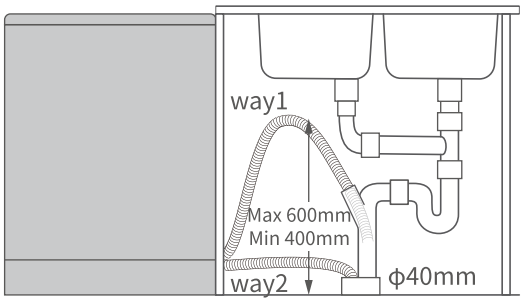

WARNING

▶ The inlet hose can not be recycled.
▶ Do not use the old or broken inlet hose.
▶ The inlet water temperature should not exceed 50°C.
▶ When the first time that water in, the water in appliance turns yellow which is normal; It is because the water softener in water for a long time. Please feel free to use.
▶ Every appliance have passed the water test in factory. It is normal if you found some water leave in appliance. Please feel free to use it.

1.Adjustment

1. Ensure that the appliance is situated securely on the floor; otherwise it will cause overflow and electric leakage
2. If the dishwasher can not be placed vertically, you can adjust the adjustable foot to make it balance.

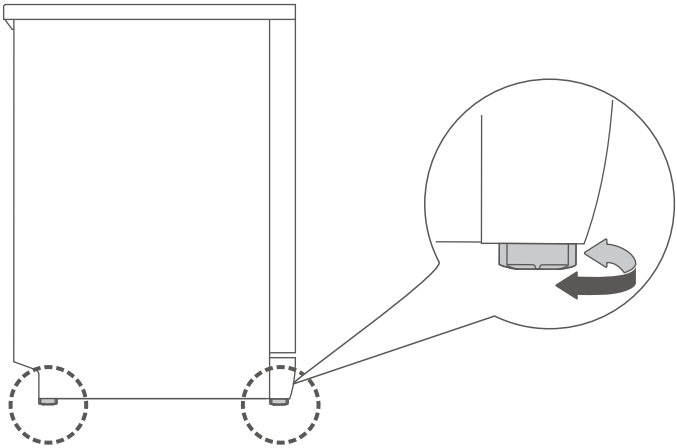

3. Ensure that the dishwasher is balanced after adjustment.

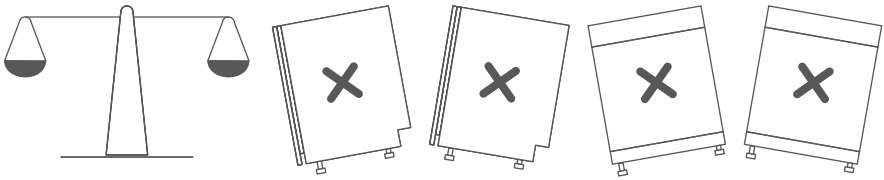

2.Check

After the installation, please check dishwasher as follows:

- ▶ Whether the dishwasher is settled horizontally.
- ▶ Whether the power is on, the dishwasher runs normally.
- ▶ Whether the inlet hose and drain hose are connected well.
- ▶ Whether all the packages are taken out of dishwasher.

1.Detergent

Special dishwasher detergent will remove oil and food residues. It is necessary every time you use the appliance. The amount of detergent you should use depends on the quantity and type of soiling present on the utensils.

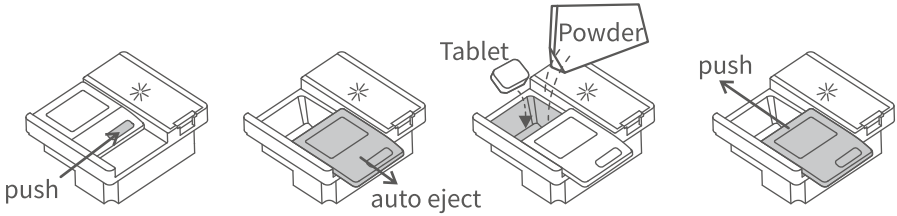

2.Rinse aid

Help to dry and shine crockery, make it as good as new.
Rinse aid is necessary when you use dishwasher for the first time. It is a reusable consumable. As soon as ‘ ’ icon is lit, rinse aid should be topped up.

Steps:
1. Open the lid of the dispenser.
2. Slowly pour the rinse aid into the designated compartment.
3. Close the lid securely.
4. Wipe up any spills with a cloth.

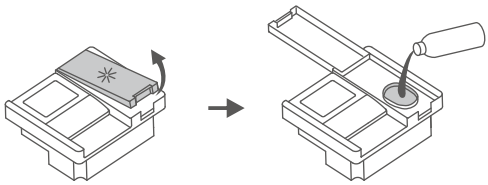

Setting:

1. Pressing the Power button for 1 second.

2. Press the Program button and Power button for 5 seconds in 60 seconds after power on to enter the dispenser setting mode. And the display shows the current gear.

3. Press the Program button to switch gears. when the control panel has no operation for more than 5 seconds. The current gear will be saved and exit the dispenser setting mode.

Adjust setting based on use. Default setting is d4. For energy efficiency testing, the level should be set to d6. Large value means increasing dosage, and viceversa. If you feel surface is greasy, please lower setting and wash again.

3.Water softener

Softens water, reduces scale buildup, and keeps utensils like new. Ideal for hard water areas. Check local water hardness with your utility company.

▶ If the power goes off while the dishwasher is operating, the water softener will reset and recounted.

Water hardness (ppm)	0-90	91-200	201-300	301-400	401-500	more than 500
Hardness setting options	H1*	H2	H3	H4(Default)	H5	H6

*H1: The water softener is off. The ‘ ’ icon is off.

1. Pressing the Power button for 1 second.

2. With in 60 seconds after starting up, press the Start/Pause button for 5 seconds to enter setting mode.

3. The ‘ ’ and ‘ ’ icons are lit, indicating that the appliance is in setup mode.

H:1 ··· H:2 ··· Cyclic display

4. Press the Start/Pause button to choose settings. It’s will save your selection and enter standby mode after 5 seconds of no input.

4.Special salt

For the first use, add 1000g of dishwasher-specific salt.

▶ The use of non-dishwasher softening salt is strictly prohibited!

Salt is refilled as needed when the ‘ ’ icon is lit.

▶ Note: The light may remain on until the salt fully dissolves.

Steps:

1. Turn the lid anticlockwise and lift it up.
2. Fill the water softener with salt (approx. 1000g). When you first switch on the appliance, also add some fresh water.
3. Turn the lid clockwise to close it tightly, then clean it with a clean cloth.
4. Run the “ Rapid ” program to rinse away spilled salt or excess solution.

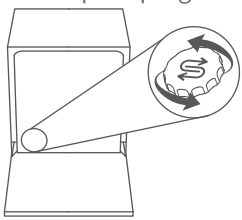

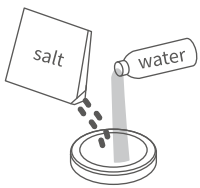



1.Utensils selection

Dishwasher-proof utensils:
Ceramic tableware, Glassware and Stainless steel tableware.

ATTENTION

▶ Utensils made of precious metal, aluminum, or with colored glaze may become cloudy after being washed in a dishwasher.
▶ Bamboo or wooden cutlery may come loose or crack at high temperatures.
▶ For plastic cutlery or items with plastic parts, please refer to the manufacturer's instructions, as they may deform or crack at high temperatures.
▶ Cleaning cloths may cause the dishwasher to malfunction.
▶ Cast iron items may rust if washed in a dishwasher.

2.Placement attentions



▶ Remove large food remnants, such as bones or vegetable leaves, before placing in.
▶ Position all utensils with dirty surfaces angled downward. Laying them flat or inverting them may cause water to collect on top.
▶ Ensure utensils do not protrude from the basket, as this may obstruct the rotation of the spray arms.
▶ Ensure utensils do not protrude from the basket, as this may obstruct the rotation of the spray arms.
▶ To prevent small utensils from falling out of the basket and obstructing the spray arms' rotation, refrain from placing these items in the dishwasher.
▶ When sliding the basket back in, be careful not to let sharp utensils cut the inner seal.
▶ Avoid scratching the basket's top coat, as this may lead to rusting.
▶ Place cutlery, unsorted and with tips facing down, into the cutlery basket.
▶ Load knives and other utensils with sharp points in the basket with points facing down, or place them in a horizontal position.

TIPS: After pushing the basket in, flip the spray arm to ensure it can still rotate freely.

3.Loading

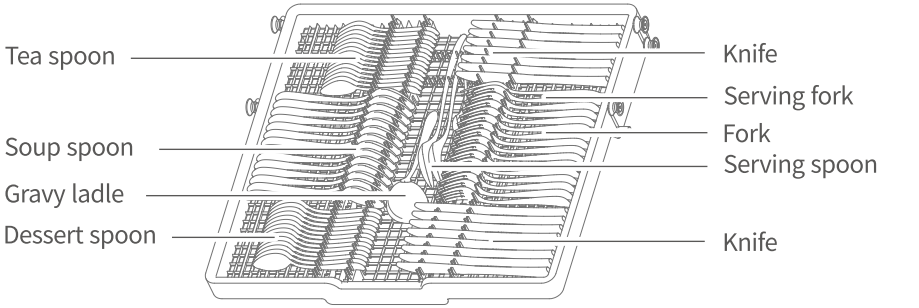

Top basket

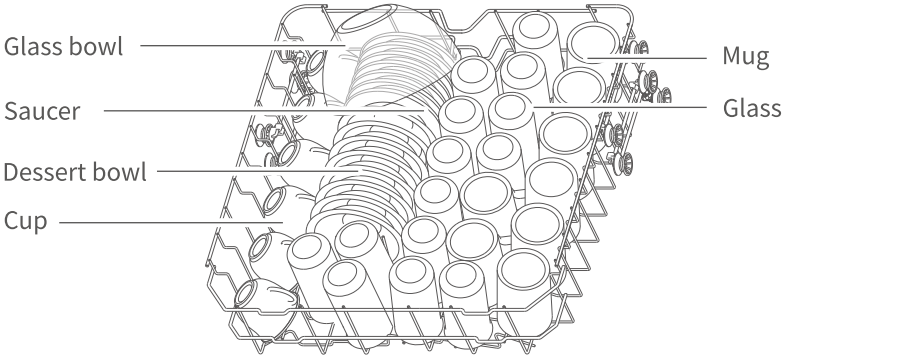

Upper basket

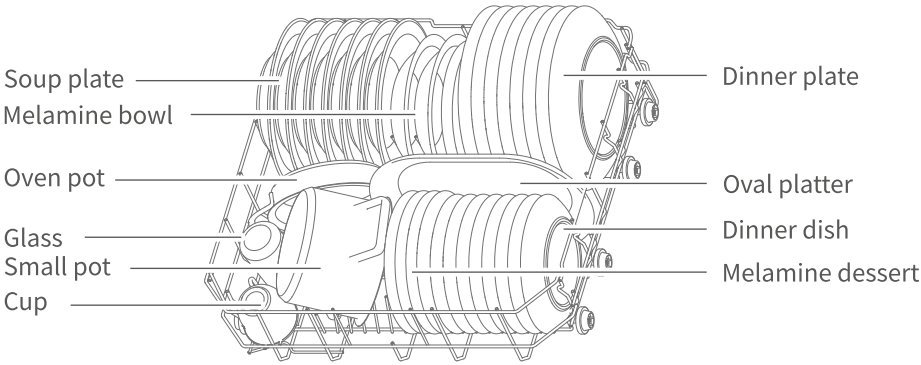

Lower basket

1.Programs

Program	Type of soiling	Detergent	Wash cycle (h)
		washing powder	
Intensive	Stubborn burnt stains, baked-on or dried-on food residues.	23g	3:20
Universal	Daily meals with normal food residues.	23g	2:30
ECO	The most efficient program for EU eco-design compliance, based on combined energy and water consumption.	5+18g	4:30
Glass	Glassware, fine china, crystal	23g	1:30
Rapid	Light stains or urgent cleaning needs.	–	0:35
Prewash	Quick rinse to remove dust. Especially for long-time-stored dishes.	–	0:13
Express	Express wash removing light food residues in just over an hour.	23g	1:20

ATTENTION

▶ To achieve a better cleaning effect, please do not overuse detergent. Excessive detergent will not only produce a lot of bubbles but also affect the cleaning effectiveness.

▶ The actual runtime of each program may vary from the preset cycle time due to factors such as water temperature, the quantity of utensils, the type of soiling, and the regeneration of water softening. This variation is normal; please use the dishwasher with confidence.

2.Control panel



Control button on left side：

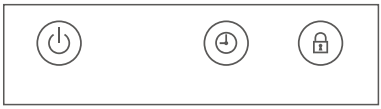

Control button on right side：

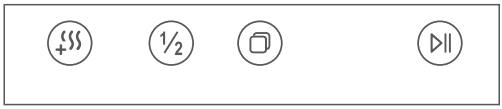

- Check water supply
- Refill salt
- ½ Half load
- Refill rinse aid
- Child lock
- Extra drying

3.Operation

1. Start the dishwasher by pressing the Power button for 1 second.

2. Choose a wash program with the Program button.
   Please select a suitable program.

3. Start wash program by pressing Star/Pause button.

ATTENTION

▶ To change programs during operation:
Long-press the power button to shut down, restart the dishwasher, then select your desired program.
▶ Selecting ECO mode disables additional functions due to its preset program.
▶ All spray arms reset after dishwasher restart.

4.Functions

DELAY START

You can delay the start of the program by up to 24 hours.

1. Start the dishwasher by pressing the Power button for 1 second.

2. Press the Program button to select a suitable program.

H:00→H:01→H:02→ Cyclic display

3. Press the Delay start button, and the display will repeatedly show times from H:00 to H:24. Select your desired delay start time. If you press the button for 3 seconds, the screen will reset to H:00, indicating that no time has been preselected.

4. Press Start/Pause button to delay the start of the program.

CHILD LOCK

Holding down for 3 seconds can turn the child lock function on or off. The ‘ ’ icon lights up to indicate that the function is on, and it goes off when the function is off.

EXTRA DRY (This feature is available for some programs only.)

Pressing the button when the power is on, and the icon ‘ ’ will appear on the display. Activating this function will increase the water temperature during the wash cycle, which will raise the temperature of the dishes and help them dry faster.

HALF LOAD

This function is used to reduce the washing time and the water using during the dishwasher is running. The reducing rang of washing time and water using are according to each program. When you want to choose this function, please follow the step below.
After choosing the washing program, press the button once, then the indicator '1/2' on display will be bright, the function has been chosen.

CLEANING AND MAINTENANCE

After use, residue may accumulate in the appliance. Clean immediately when visible and maintain regular cleaning.

1. Filter cleaning

1. Turn the cylinder filter counterclockwise and pulling them upwards.
2.Rinse the filter assembly with running water. Avoid using steel wool or wire brushes, as metallic abrasives may induce corrosion on the filter components.

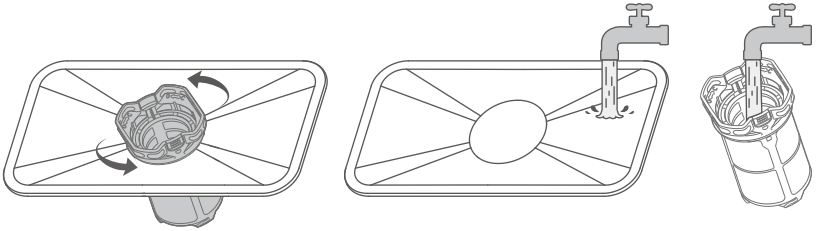

3. After cleaning, reinstall the filter by rotating the cylinder filter clockwise, until the triangle marks on the filter, mesh, and flat filter align.

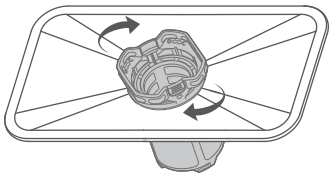

2. Spray arms cleaning

1. Hold the clip with one hand, and with the other hand, turn the upper spray arm counterclockwise and pull it down.
2. Remove the main basket then pull the lower spray arm straight off the clip.
3. If the spray arm holes are blocked, carefully clear them using a thin wire and rinse with water.

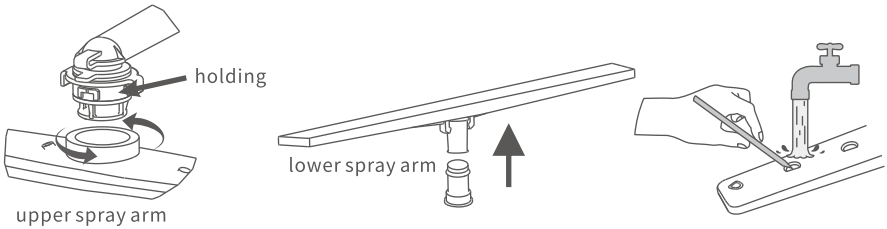

3. Interior Cleaning

Clean seals and hard-to-reach areas with a citric acid solution and a damp cloth.
Use only dishwasher cleaner for the interior tub and internals. Follow the cleaner's instructions.
NEVER use dish soap, laundry detergent, etc. instead of dishwasher cleaner.

ERROR CODE

D1

Error code	Cause	Remedy
E01	Thermistor short circuit	Please contact the after-sales service department
E02	Thermistor open circuit	Please contact the after-sales service department
E03	The machine is not heated	1. Ensure utensils are placed correctly to prevent water from pooling on dishes 2. Please contact the after-sales service department
E04	Inlet valve failure	Please contact the after-sales service department
E05	Overflow	1. Please tilt the appliance about 30° to 45° to drain out the water from the bottom plate 2. Check if the drain hose is placed too high 3. Check if the hose is tied in a knot, blocked, or pinched 4. Check if the appliance is placed correctly 5. If the above causes are excluded, try restarting the appliance 6. Please contact the after-sales service department
E06	Heating function abnormal	Please contact the after-sales service department
E10	Water inflow abnormal	1. Check if the water tap is fully open 2. Check if the water pressure is too low 3. Avoid multiple restarts during water shortage 4. Please contact the after-sales service department
E11	Water divider value abnormal	1. Unplug the power cord and plug it back in again 2. Please contact the after-sales service department

TROUBLESHOOTING

D2

Problem	Cause	Remedy
Utensils are wet	Rinse aid is out or insufficient	Add rinse aid and set the dispenser to maximum
	Utensils are piled up without spacing	Reload dishwasher following placement rules
	The washing cycle is still running	Wait until the cycle completes
	Selected program excludes drying	This mode has no drying function
The washing powder/tablet is not dissolved	Spray arm holes are blocked	Clean spray arm holes and run a quick wash cycle
	Excessive detergent used	Rerun a quick wash cycle; next time use measured detergent
	Low-quality detergent used	Use specialized detergent in recommended dosage and rerun quick wash cycle
Excessive droplets in tub interior	Rinse aid container is empty	Refill rinse aid
Minor droplets in tub interior	Normal residue (non-impactful)	/
Foam in tub interior	1. Non-specialized detergent used 2. Detergent overdose	Slight foam: Open the door and let it dissipate naturally Heavy foam: - Remove foam with a cloth - Run any program for 3 minutes - Repeat until no foam remains

Problem	Cause	Remedy
Appliance makes blowing noise when plugged in, display shows "FAN"	Air renewal system operating	Normal operation (no action required)
Hard to open door	There is dirt in door groove causing obstruction	Clean door groove thoroughly
Power button unresponsive	Power cord unplugged or power outage	Plug in power cord, verify power supply
	Grease/water on control panel or hands	Clean control panel and dry hands
	Button press duration too short	Press power button for 1 second
Other buttons unresponsive except the power button	Grease/water on control panel or hands	Clean control panel and dry hands
	PCB door lock failure	Please contact the after sales service department
The water shortage icon lights up when water is filling	Water supply issue	Check water valve position and hose connections
	Flowmeter failure	Please contact the after sales service department
	Inlet valve failure	Please contact the after sales service department
Crashing noise during operation	1. Improper utensil placement obstructing spray arms 2. Utensils colliding	Reload dishwasher following placement rules
Utensils not cleaned	Utensils are piled up without spacing	Reload dishwasher following placement rules
	Incorrect program selected	Select an appropriate program
	1. Non-specialized detergent used 2. Detergent insufficient	Use specialized detergent in recommended dosage
	Filter improperly installed	Reinstall filter in correct position
	Spray arms blocked	Clean the spray arms
	Spray arms stucked	Reload dishwasher following placement rules
	Food residue adhering to utensils	Pre-soak utensils for a while
	Power interruption	Restart program after power restoration
	Stubborn adherent residue	Hand-scrub adhered residue with nylon brush before loading
Water pooling in tub interior when appliance not in use	Drain hose positioned too high	Adjust drain hose height per manual
	Drain pump failure	Please contact the after-sales service department
	Inlet valve failure	Please contact the after-sales service department

If the solutions above can not fix the problems, please stop the appliance immediately and cut off the power and water supply. Please contact the after-sales department.

TECHNICAL DATA

Outline size	W598xH845xD591 mm
Capacity	15 place settings
Rated power	1890 W
Voltage	220-240 V~
Frequency	50 Hz
Waterproof	IPX1
Water pressure	0.04-1.0 MPa
Control mode	Automatic
Execution standards	EN 60335-1 EN 60335-2-5

Due to continuous product improvements, technical parameters in this manual may be modified without prior notice.

STATEMENT

As our product technology innovates and improves, the specifications of this model may evolve without advance notice. The images within the instruction manual are illustrative and should not be considered definitive representations of the purchased product.

We may update our manufacturing standards to reflect product enhancements.

Please note that such updates do not retroactively alter the specifications or standards of products already sold.

*Provide valid vouchers for purchasing products during the warranty period: Invoice or product SN code.
*Free warranty within 12 months based on the date of SN code of the product leaving the factory.
*The following conditions do not fall within the scope of free maintenance during the warranty period:
1. Damage caused by improper use and maintenance of users.
2. Failure to produce valid vouchers (neither invoices nor product SN codes), unclear valid vouchers, unable to confirm or altered.
3. Damage caused by irresistible natural disasters (typhoons, snow disasters, hail, earthquakes, debris flows, etc.).
4. Repair by an unqualified third party.

Maintenance record card

Maintenance frequency	Fault phenomenon	Maintenance record	Maintenance date	Maintenance signature
1				
2				
3				
4				
5				

After maintenance, the maintenance staff need to make a record of the maintenance status, for offer you a better service in the future.

Importado por B73737553
Av Altos Hornos S/N Pto Sagunto (46520) Valencia, España
www.aspes.es
aspes@sareteknika.es
902 99 69 01 / 944 04 14 08