HYUNDAI

User Manual

HDW6013EDI00
HDW6013EDW00

GENUINE PRODUCT OF
HYUNDAI CORPORATION



CONTENTS

SAFETY A

Important safety instruction A1

INSTALLATION B

Product overview B1
Installation dimensions B2
Inlet hose & drain hose B3
Install into the cabinet B4
Inlet & drain water B5
Adjustment & inspection B6

HOW TO USE C

Consumables C1
Loading basket C2
Operation C3
Cleaning and maintenance C4

TECHNICAL SUPPORT AND CUSTOMER SERVICE D

Error code D1
Trobleshooting D2
Technical data D3
Statement D4
Customer service D5

⚠ Warning

There are some important safety instructions in this manual, Please read carefully before installing and using.

- This appliance can only be used to wash household utensils, and is intended to be used in household and similar applications.
- The dishwasher will be damaged or the user will be injured when the operation is wrong.
- Please contact the after-sales service department immediately if the appliance breaks down. Do not reassembly or fix the appliance by yourself.
- Please contact the after-sales service department or the maintenance department that vendor assigned for fixing or displacing if the power cord is damaged.
- The power source of dishwasher has to adopt earth line for safe.
- This adoption will protect the person maximumly, who is shocked by leakage.
- Disconnect the power cord at stormy.
- After installation, please make sure the connection of water and power well connected before using.
- The installation position of drainage pipe could not exceed 40cm higher than the top of the appliance, which will cause poor drainage, electrical leakage and water leakage.
- Knives and other utensils with sharp points must be loaded in the basket with their points down or placed in a horizontal position.
- This dishwasher is an automatic appliance, do not add water manually when the appliance is working. It will cause

overflow and dangerous.
- Do not move or clean appliance when it is working. It might cause electrical or water leakage.
- Do not open the door during operation as the steam will hurt you. If it is necessary to load or unload some utensils, please push pause button and wait 10 seconds, then open the door slightly and wait for the steam dissipate completely, then open the door and move your utensils.
- Please use specialized detergents. Do not use washing-up liquid, washing powder, hand sensitizer soup or others detergents that not specialized for dishwasher.
- There are some cable ties on the drainage pipe and power cord, please use flat scissor to cut the ties. Sharp scissor might burst the pipe and cord and cause leakage.
- Do not try to use this appliance in damp place. High humidity will make the appliance rust, even leakage.
- The specialized detergent should be put on the place where kids can not reach. because the detergents are contains acidoid and alkaline, which are really dangerous to kids.
- Utensils will be hot after washing, please take it out after 30 minutes.
- Please keep the appliance at room temperature for 8 hours after receiving the product in winter, to avoid the droplets appearing on the surface of the glass, and it may damage the appliance.
- The appliance is to be connected to the water mains using new hose-sets and that old hose-sets should not be reused.
- During installation, the power supply must not be excessively or dangerously bent or flattened.
- Please use flat scissors to cut the tie of water pipes and

power lines when unpacking boxes.

- Position the appliance in the desired location. Confirm that the machine has been leveled.
- Please don't put anything else on either side, The openings must not be obstructed by a carpet.
- Please use cold water or warm water not exceeding 50°C.
- This appliance is not intended for use by persons (including children) with reduced physical, sensory or mental capabilities, or lack of experience and knowledge, unless they have been given supervision or instruction concerning use of the appliance by a person responsible for their safety.
- Children should be supervised to ensure that they do not play with the appliance.
- If the supply cord is damaged, it must be replaced by the manufacturer, its service agent or similarly qualified persons in order to avoid a hazard.
- The door should not be left in the open position since this could present a tripping hazard. Please keep kids stay away from the dishwasher, especially when the door open.
- This appliance can be used by children aged from 8 years and above and persons with reduced physical, sensory or mental capabilities or lack of experience and knowledge if they have been given supervision or instruction concerning use of the appliance in a safe way and understand the hazards involved.
- The maximum permissible inlet water pressure is 1.00 Mpa.
- The minimum permissible inlet water pressure is 0.04 MPa, to ensure the proper functioning of the appliance.

- After using the appliance, please cut off the power and water.
- WARNING: Knives and other utensils with sharp points must be loaded in the basket with their points down or placed in a horizontal position. When using your dishwasher, follow basic precautions, including the following:

a) Read all instructions before using the dishwasher.
b) Use the dishwasher only for its intended function.
c) Use only detergents or wetting agents recommended for use in a dishwasher and keep them out of the reach of children.
d) When loading items to be washed:
   1. Locate sharp items so that they are not likely to damage the door seal;
   2. Load sharp knives with the handles up to reduce the risk of cut-type injuries.
e) Do not wash plastic items unless they are marked "dishwasher safe" or the equivalent. For plastic items not so marked, check the manufacturer's recommendations.
f) Do not touch the heating element during or immediately after use.
g) Do not operate your dishwasher unless all enclosure panels are properly in place.
h) Do not tamper with controls.
i) Do not abuse, sit on, or stand on the door or dish rack of the dishwasher.
j) To reduce the risk of injury, do not allow children to play in or on a dishwasher.
k) Under certain conditions, hydrogen gas might be produced in a hot-water system that has not been used for two weeks or more.

HYDROGEN GAS IS EXPLOSIVE. If the hot-water system has not been used for such a period, before using the dishwasher turn on all hot-water faucets and let the water flow from each for several minutes. This will release any accumulated hydrogen gas. As the gas is flammable, do not smoke or use an open flame during this time.
l) Remove the door to the washing compartment when removing an old dishwasher from service or discarding it.
Keep a gap of 5 cm on each side between the appliance and furniture or walls to prevent them from heating up.

Grounding instruction

- This appliance must be grounded. In the event of a malfunction or breakdown, grounding will reduce the risk of an electric shock by providing a path of least resistance of electric current. This appliance is equipped with a cord having an equipment-grounding conductor and a grounding plug.
- The plug must be plugged into an appropriate outlet that is installed and grounded in accordance with all local codes and ordinances.
- Improper connection of the equipment-grounding conductor can result in a risk of electric shock.
- Check with a qualified electrician or service representative if you are in doubt whether the appliance is properly grounded. Do not modify the plug provided with the appliance; If it will not fit the outlet, have a proper outlet installed by a qualified electrician.
- Please do not use power strip.

DISPOSAL OF PACKAGING AND PRODUCT



Dispose of packaging in an environmentally-friendly manner.This appliance is labelled in accordance with European Directive 2012/19/EU concerning used electrical and electronic appliances (waste electrical and electronic equipment - WEEE). The guideline determines the frame work for the return and recycling of used appliances as applicable throughout to the EU.

PACKAGE INFORMATION:
Packaging materials of the product are manufactured from recyclable materials in accordance with our National Environment Regulations. Do not dispose of the packaging materials together with the domestic or other wastes. Take them to the packaging material collection points designated by the local authorities.

1.Parts and Features

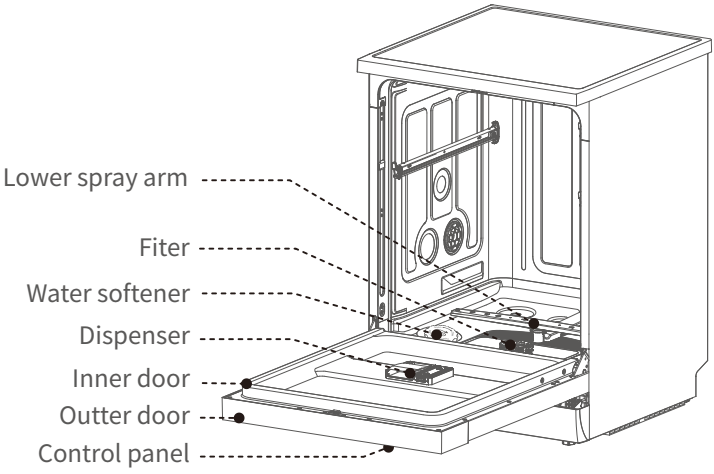

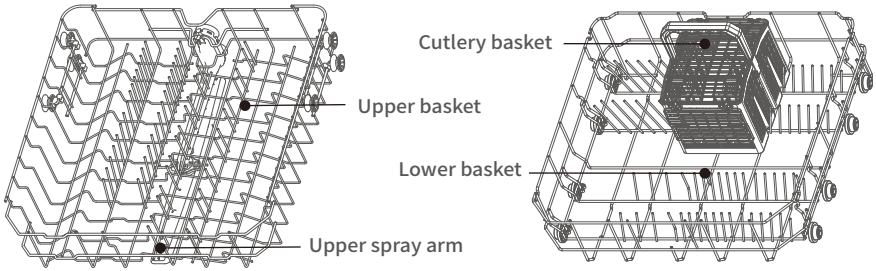

2.Accessories

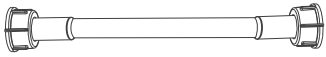

Inlet hose *1



Funnel *1

Note: The illustration is a reference image, your device may differ.

1.with top panel

unit:mm

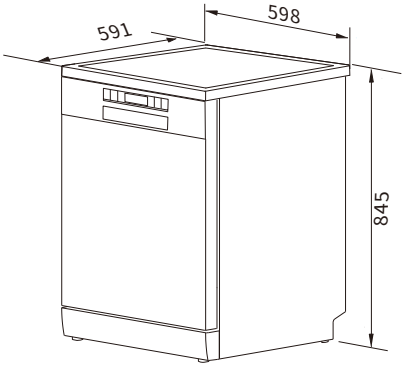

2.without top panel

unit:mm

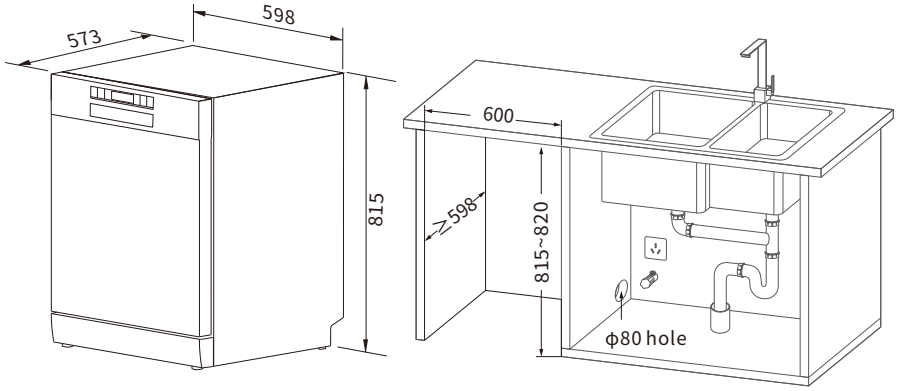

ATTENTION

1.The dishwasher can only be freestanding and cannot be built into the cabinet while the top plate remains unassembled. It is also prohibited to place it on a table.

2.The top plate must be placed inside the cabinet after disassembly.

1.Inlet Hose

Connect the inlet pipe to inlet valve.

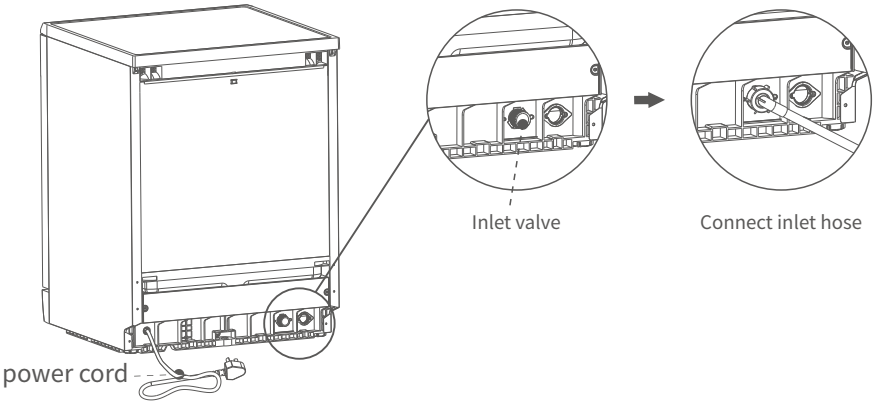

WARNING

- The inlet pipe can not be recycled.
- Do not use the old or broken inlet pipe.
- The inlet water temperature should not exceed 50°C.

2.Drain Hose

Make sure the drain pipe is connected to the drain connector.

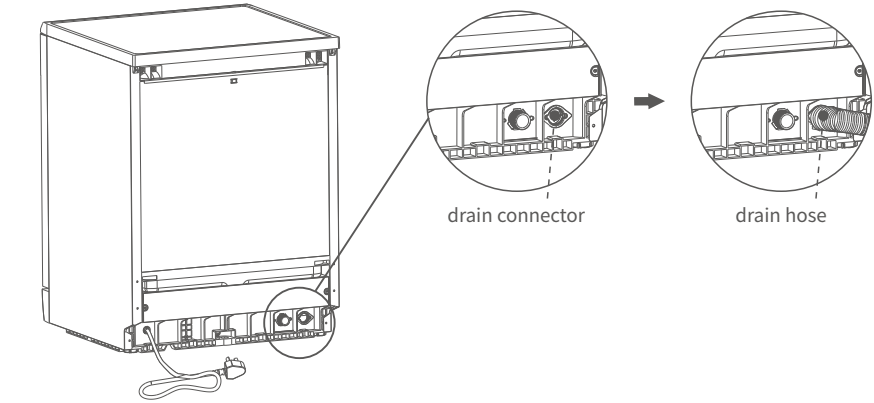

1.Stick the steam resisted sticker on the top of the hole in cabinet.

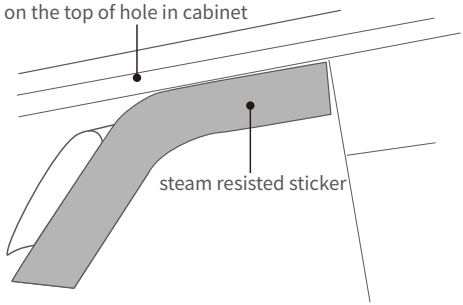

2.Make sure the inlet hose and drain hose is install correct at the back of dishwasher.

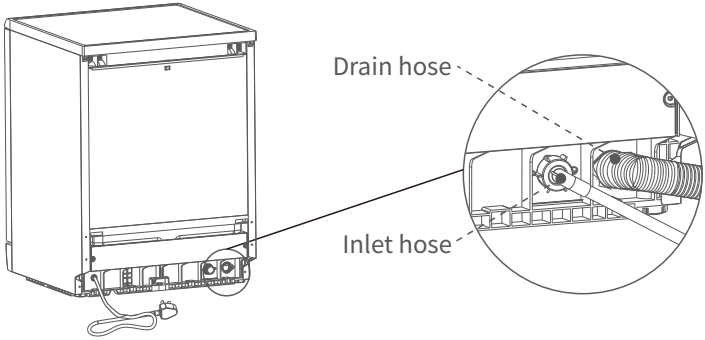

3.Put the dishwasher into the cabinet. At the same time the power cord, inlet hose, and the drain hose should pass through the designated entrance and exit holes..Make sure the power cord, inlet hose, and the drain hose are not folded.

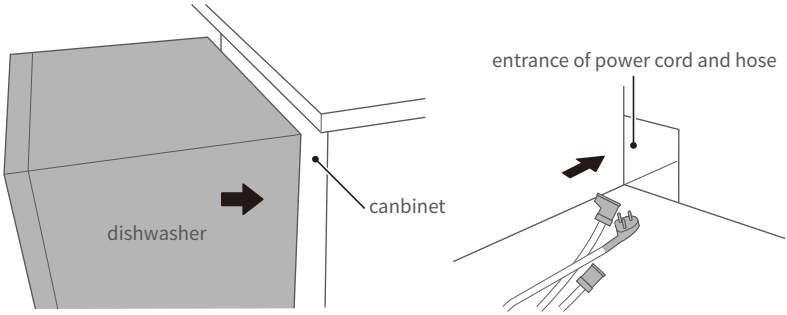

1.Inlet water

Ensure that the inlet hose is connected to the connection properly secured.

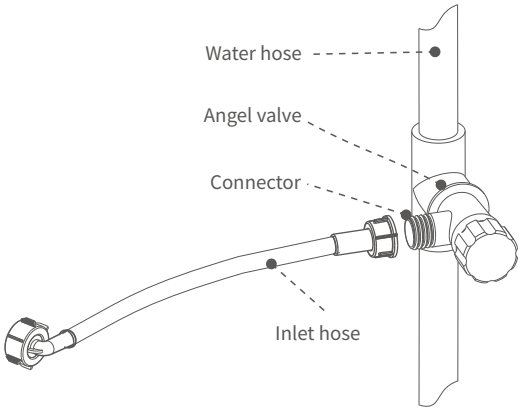

2.Drain water

1. Insert the drain hose into the drain port at least 100mm in case of the hose out of the port when draining the water.
2. The drain pipe can not be folded and compression deformation to keep draining water smoothly.
3. If the drain is too long when install or repair the dishwasher, the hose can be cut according to the real state with the agreement from user.
4.If the drain hose is not long enough, please contact the customer service.
5. The drain port need to have the overflow resisted step.

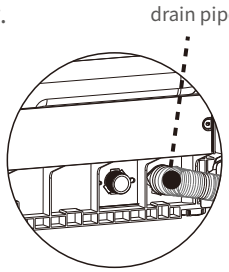

(Back Diagram)

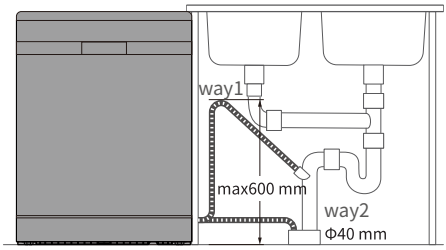

with the top plate

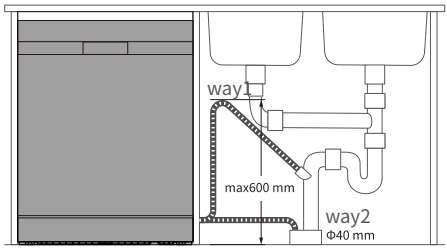

without the top plate

1.Adjustment

1. Ensure that the appliance is situated securely on the floor; otherwise it will cause overflow and electric leakage
2. If the dishwasher can not be placed vertically, you can adjust the adjustable foot to make it balance.

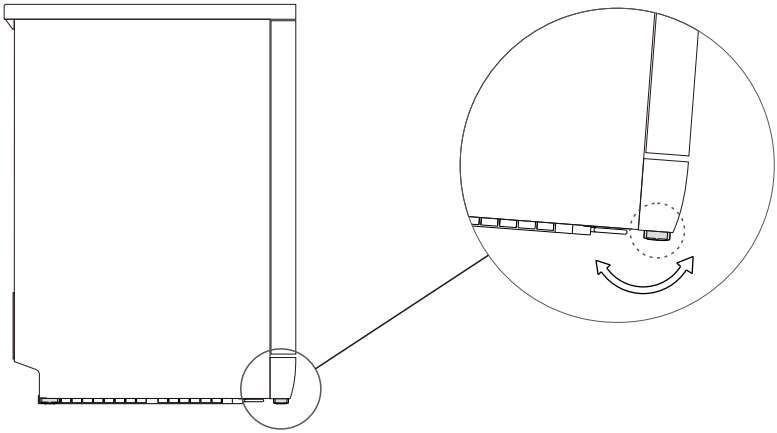

2.Check

After the installation, please check dishwasher as follows:
1. Whether the dishwasher is settled horizontally.
2. Whether the power is on, the dishwasher runs normally.
3. Whether the inlet hose and drain hose are connected well.
4. Whether all the packages are taken out of dishwasher.

ATTENTION

1.Keep this manual and accessory well in case you need to use them next time.
2.It is normal for water to turn yellow in the dishwasher during its first use. This is because the material in the water softener has been wet for a long time, but it will not affect its normal operation.
3.It is normal to see water inside the dishwasher because the factory ran tests on it before shipment. Please feel free to use it.

1.Detergent

Special dishwasher detergent will remove oil and food residues. It is necessary every time you use the appliance. The amount of detergent you should use depends on the quantity and type of soiling present on the utensils. Full load with heavy soiling, use 22g.

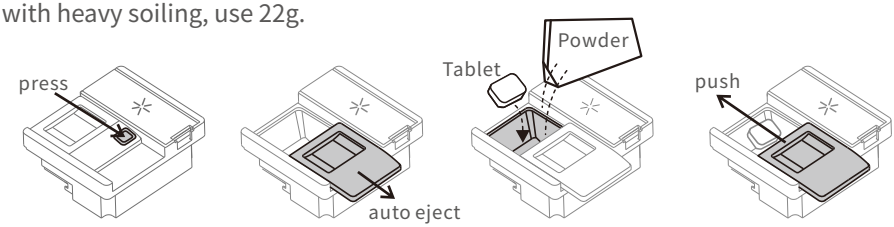

2.Rinse aid

Help to dry and shine crockery, make it as good as new.
Rinse aid is necessary when you use dishwasher for the first time. It is a reusable consumable. As soon as " Rinser " indicator is lights on display, rinse aid should be topped up.

Steps:
1. Open the lid of the dispenser.
2. Slowly pour the rinse aid into the designated compartment.
3. Close the lid securely.
4. Wipe up any spills with a cloth.

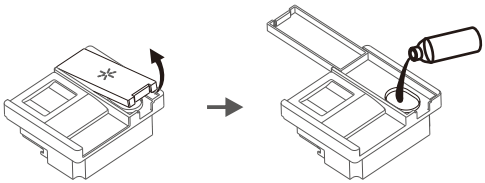

Setting:

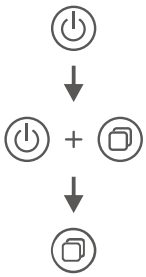

power

Press the program button and power button for 5 seconds in 60 seconds after power on to enter the dispenser setting mode. And the display shows the current gear.

Press the program button to switch gears. when the control panel has no operation for more than 3 seconds. The current gear will be saved and exit the dispenser setting mode.

Adjust setting based on use. Default setting is d4. Large value means increasing dosage, and viceversa.
If you feel surface is greasy, please lower setting and wash again.

3.Water softener

1. It's used to soften water, reduce mineral scale buildup, and keep utensils looking like new. It is particularly suitable for areas with high water hardness.
2. Ask your local water utility company for the water hardness value of tap water.
3. If the power goes off while the dishwasher is operating, the water softener will reset and recounted.

Making setting reference table according to the hardness of local tap water.

Water hardness (ppm)	0-90	91-200	201-300	301-400	401-500	more than 500
Hardness setting options	H1	H2	H3	H4(Default)	H5	H6

When is H1 , the softener is not working , the" ⇆ "is lights out.

Press the power button. → ⏯ With in 60 seconds after starting up, press ⏯ button for 5 seconds to enter setting mode.

↓

⇆ + ✳ Indicator" ⇆ "and" ✳ "light up which indicates the appliance has been insetting mode.

↓

⏯ H:1 ⋮ H:2 Change and select suitable setting with ⏯ button. If user did not press ⏯ button for 5 seconds, the appliance will exit the setting mode and be in standby state. The chosen setting has been stored.

Cyclic display

4.Special salt

1. Turn the lid anticlockwise and lift it up.
2. Fill the water softener with salt (approx. 1000g). When you first switch on the appliance, also add some fresh water.
3. Turn the lid clockwise to close it tightly, then clean it with a clean cloth.

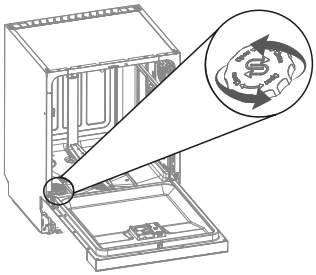

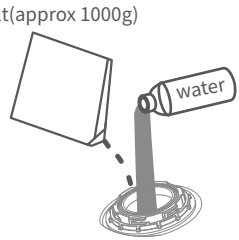

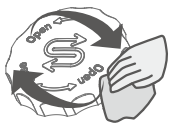

ATTENTION

Before the first wash cycle, salt must be added. It is a reusable consumable. When the 'Salt' light is illuminated on the display, it indicates that salt should be replenished. After adding salt, run the 'P4' program to ensure that any spilled salt and excess salt solution are immediately flushed out. Please note that after adding a sufficient amount of the recommended type of salt, the 'Salt' indicator may not turn off immediately.

LOADING BASKET

C2

1.Utensils selection

Dishwasher-proof utensils:
Ceramic tableware , Glassware and Stainless steel tableware.

ATTENTION

1. Utensils made of precious metal, aluminum, or with colored glaze may become cloudy after being washed in a dishwasher.
2. Bamboo or wooden cutlery may come loose or crack at high temperatures.
3. For plastic cutlery or items with plastic parts, please refer to the manufacturer's instructions, as they may deform or crack at high temperatures.
4. Cleaning cloths may cause the dishwasher to malfunction.
5. Cast iron items may rust if washed in a dishwasher.

2.Placement attentions

1. Remove large food remnants, such as bones or vegetable leaves, before placing in.
2. Position all utensils with dirty surfaces facing down. Laying them flat or inverting them may cause water to collect on top.
3. Ensure utensils do not protrude from the basket, as this may obstruct the rotation of the spray arms.
4. Ensure utensils do not protrude from the basket, as this may obstruct the rotation of the spray arms.
5. To prevent small utensils from falling out of the basket and obstructing the spray arms' rotation, refrain from placing these items in the dishwasher.
6. When sliding the basket back in, be careful not to let sharp utensils cut the inner seal.
7. Avoid scratching the basket's top coat, as this may lead to rusting.
8. Place cutlery, unsorted and with tips facing down, into the cutlery basket.
9. Load knives and other utensils with sharp points in the basket with points facing down, or place them in a horizontal position.

TIPS: After pushing the basket in, flip the spray arm to ensure it can still rotate freely.

3.Loading

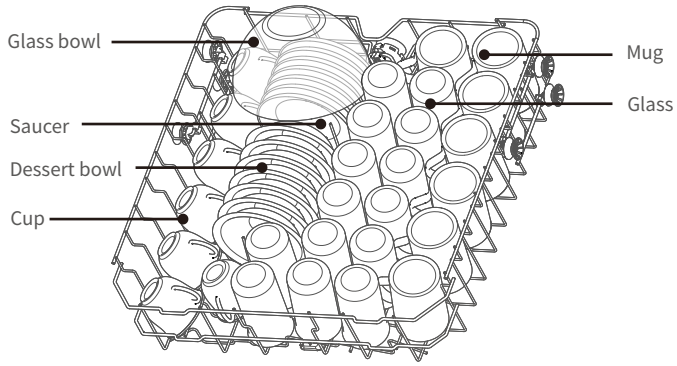

Upper basket

*Two serving spoon's placement needs to be tilted, otherwise it will block the spray arm and affect the cleaning effectiveness.

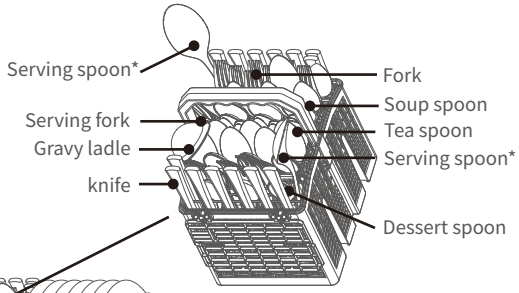

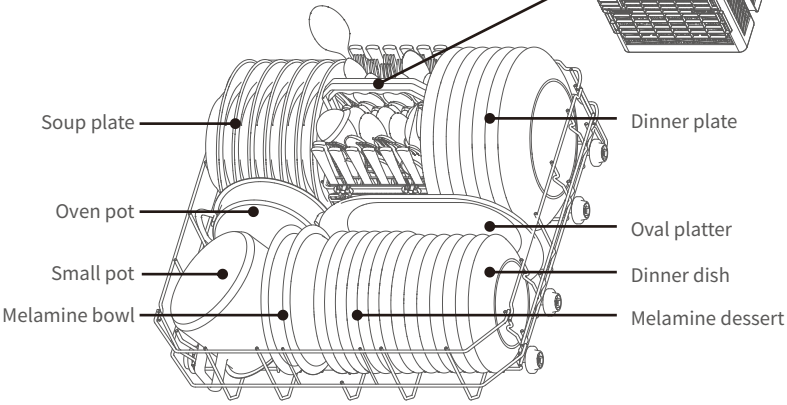

Lower basket

1.Programs

Programme	Type of soiling	Consumption of detergent	Time cycle
		washing powder	
intensive	Very adhesive burned-in or dried-on food remnants.	22g	3:20
normal	Little dried, nomal household food remnants.	22g	2:30
ECO	Part dried, common household food remnants.	22g	3:35
glass	Slightly adhesive, temperature-sensitive plastic and glasses.	22g	1:30
rapid	Fresh food remnants, Light and less oil.	–	0:35
prewash	Wash out the residue from tableware.	–	0:13
80' express	It's ideal for smaller loads of lightly soiled items that don't need really intensive cleaning	22g	1:20

ATTENTION

Please do not overuse detergent. Excessive detergent will not only produce a lot of bubbles but also affect the cleaning effectiveness. To achieve a better cleaning effect, we recommend adding 8g of washing powder outside the dispenser and 22g of washing powder inside the dispenser. The actual runtime of each program may vary from the preset cycle time due to factors such as water temperature, the quantity of utensils, the type of soiling, and the regeneration of water softening. This variation is normal; please use the dishwasher with confidence.

1.Control panel

Display

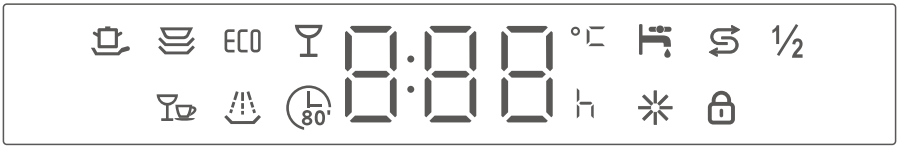

Button on the left



Button on the right

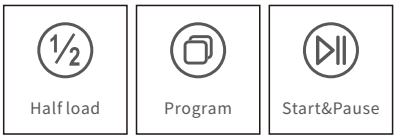

2.Operation

Close the door of the dishwasher and start the appliance by pressing for 1 second.

Change wash program with program button. Please select a suitable program.

The indicator lamps flash, it means the dishwasheris working.

Start wash program by pressing star button and close the door.

ATTENTION

1.If you want to change the program when the dishwasher is running, please press the power button to close the dishwasher then open it again to choose the program you want.

3.Functions

Child lock function

Activating: Hold down the button until ' ' is displayed on the digital display.
Deactivating: Hold down the button until the ' ' disappears from the display.

Half load function

This function is used to reduce the washing time and the water using during the dishwasher is running. The reducing rang of washing time and water using are according to each programme. When you want to choose this function, please follow the step below.
After choosing the washing programme, press the button once, then the indicator ½ on display will be bright, that means this function has been chosen.

ATTENTION

1.When you select the ECO washing mode, you cannot select additional functions, as the operation of all spray arms is predefined within the ECO program settings.
2.Upon restarting the dishwasher, all spray arms will revert to their original setting.

Delay start

Start the appliance

Select a suitable program

H:00··H:01··H:02·· Cyclic display

Press the delay start button, and the display will repeatedly show times from H:00 to H:24. Select your desired delay start time. If you press the button for 3 seconds, the screen will reset to H:00, indicating that no time has been preselected.

You can delay the start of the program by up to 24 hours.

Press Start/Pause button to delay the start of the program.

The display shows the delay time if no operations during this time for 3 seconds.

CLEANING AND MAINTENANCE

After appliance ran a while, there will be some residue and other things left in it. Please clean it when you see the residue and things, also clean the appliance immediately.

1.Take the filter out

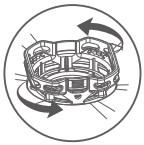

Turn the cylinder filter out with an anticlockwise motion.

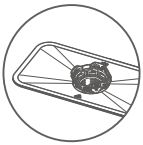

Take the stainless steel filter out at the same time.

2.Flush

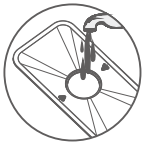

Use flowing water to flush the filter assembly. Do not use steel wool or an iron brush, as it will cause the filter to rust.



Flush the cylinder filter and filter net.



After cleaning, you can put the filter back. The cylinder filter should be assembled with a clockwise motion until the triangle marks on the filter, filter net, and stainless steel align simultaneously.

3.Spray arms cleaning

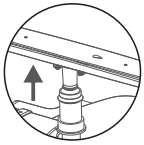

Pull the main basket out of appliance, and lift the lower spray arm a little bit for loss the clips.

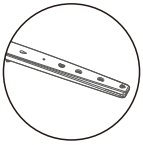

Check if the spray arms blocked. If it does, please use a thin wire to pull the blockages out or flush the hole with water.

ERROR CODE

D1

Error code	Cause	Remedy
E01	Thermistor short circuit	Please contact the after-sales service department.
E02	Thermistor open circuit	Please contact the after-sales service department.
E03	The machine is not heated	1. Please make sure the utensils be placed correctly. Water will be lack if it is in the plate/bow. 2. Please contact the after-sales service department.
E04	Inlet valve failure	Please contact the after-sales service department.
E05	Overflow	1.Lean the appliance about 30°to 45°to pour out the water in the bottom plate. 2.Check if the drainage pipe is placed too high, 3.Check if the pipe be tired a knot, blocked or pressed, 4.Check if the appliance be placed right. 5.Exclude above cause, try to restart the appliance again. Please contact the after-sales service department.
E06	Heating function abnormal	Please contact the after-sales service department.
E07	Abnormal high water level	1.Check if the high water level switch is connected properly. 2.Please contact the after-sales service department.
E10	Water inflow abnormal	1.The tap was not fully opened. 2.Small inflow and low water pressure. 3.Start-up multiple times in case of water shortage. 4.Please contact the after-sales service department.
E11	Water divide value abnormal	1.Unplug the power and power it on again 2.Please contact the after-sales service department.

TROBLESHOOTING

D2

Problem	Cause	Remedy
Utensils is wet	1.Out os rinse aid or it is not enough.	Add more rinse aid and turn the gear to maximum.
	2.Utensils be piled up and without lean.	Refer to utensils place rule.
	3.The washing process is still running.	Wait until process finished.
	4.Programme selected without drying.	The wash mode doesn't has drying function.
The washing powder and washing tablet have not been cleaned up	1.The holes of spray arm been blocked, the washing powder can not be fiushed out.	Clean the holes of spary arms and run the quick wash mode again to clean the utensil.
	2.Put too much washing power.	Run the quick wash mode again and put moderate washing powder as instruction next tim.
	3.Used low-quality washing power.	Use specialized washing powder and washing tablet with quick wash mode to wash the utensil again.
Too many drops in the inner of liner	There's no rinse aid in the container.	Add rinse aid.
Some drops in the inner of liner	It's normal and it won't impact the utensil.	
Some foam in the liner	Didn't use speciallized washing powder or put too much washing powder in it.	If there's not much foam, you can open the door and let the foam come less and less; If there's too much foam, you can remove it with tools. At last, restart any programme about 3 minutes. Redo this again and again until the foam is disappear.

Problem	Cause	Remedy
Appliance makes the noise as blowing something when is plugging. And the dispaly shows “FAN”.	The air renewal system is working.	It's normal situation.
It is hard to open the door	There are some dirt in groove, which stuck. the door.	Clean the groove.
Have no reflection when pressing power button	1. If all the lights were off and no reflection when you press the button, there are possibilities that you didn't plug in the power or the power was blackout	Please plug the power in and make sure the power have no issue.
	2.There are greasy dirt or water on the glass and hand.	clean the glass ang hand ,make sure they are dry.
	3.The time that touch power icon is too short.	Press the power icon for 1 second.
Have no reflection when pressing any button except the power botton.	1.There are greasy dirt or water on the glass and hand.	clean the glass ang hand ,make sure they are dry.
	2.PCB lock of door is broken.	Please contact the after sales service department.
The water light in control panel is lighting when water comes in	1.Check if the water supply have problem.	Make sure the water supply have no problem.
	2.The flowmeter is broken.	Please contact the after sales service department.
	3.The filling valve is broken.	Please contact the after sales service department.
Have crashing noise when it is working	Place the utensil in improper way ,some utensils is obstructing the spray arms; or some utensils are crashing each other.	Unload the dishwasher and replace the utensils in proper way.
There utensil was not cleaned up	1.utensils be piled up and without lean.	Refer to utensils place rule.
	2.Do not chose the right programme of washing.	Please chose the right programme of washing
	3.Do not use pecialized washing powder or put too little of washing power.	Use specialized washing powder and put enough of it before washing.
	4.Do not install the filter in right position and the food remnants get in it.	Re-install the filter in rightposition.
	5.The spray arms were blocked.	Clean the inner part of spray arms.
	6.The spray arms are stuck.	Check if the spray arm is stuck by the utensil.
	7.Some food remnants are sticking on the utensil.	Soak the utensil for a while before washing.
	8.Black out when the appliance is working.	Restart the washing programme.
	9.Some food remnants are too hard to wash.	Suggest wash utensil with steel wool before put it in appliance to wash.
A lot of water were left in appliance when is not working	1.The position of drainage pipe is too high.	Refer to drainage pipe installation.
	2.Drainage pump is broken.	Please contact the after-sales service department.
	3.The filling valve is broken.	Please contact the after-sales service department.

If the solutions above can not fix the problems, please stop to use appliance immediately and cut off the power and water supply. Please contact the after-sales department.

TECHNICAL DATA

Outline size	W598xH845xD591mm
Capacity*	14 place settings
Rated power	1890W
Voltage	220-240V~
Frequency	50Hz
Waterproof	IPX1
Water pressure	0.04-1.0MPa
Control mode	Automatic
Execution standards	EN 60335-1 EN 60335-2-5

*The maximum number of place settings to be washed was 14.

Due to the continuous improvement of products, such as the technical parameters in this manual are modified with out prior notice.

STATEMENT

As our product technology innovates and improves, the specifications of this model may evolve without advance notice. The images within the instruction manual are illustrative and should not be considered definitive representations of the purchased product.

We may update our manufacturing standards to reflect product enhancements.

Please note that such updates do not retroactively alter the specifications or standards of products already sold.

*Provide valid vouchers for purchasing products during the warranty period: Invoice or product SN code.
*Free warranty within 12 months based on the date of SN code of the product leaving the factory.
*The following conditions do not fall within the scope of free maintenance during the warranty period:
1. Damage caused by improper use and maintenance of users；
2. Failure to produce valid vouchers (neither invoices nor product SN codes), unclear valid vouchers, unable to confirm or altered；
3. Damage caused by irresistible natural disasters (typhoons, snow disasters, hail, earthquakes, debris flows, etc.)。
4. Repair by an unqualified third party.

Maintenance record card

Maintenance frequency	Fault phenomenon	Maintenance record	Maintenance date	Maintenance signature
1				
2				
3				
4				
5				

After maintenance, the maintenance staff need to make a record of the maintenance status, for offer you a better service in the future.

HYUNDAI

Importado por S.T. S.L con CIF B73737553
Distribuido por KOREA SMART HOME, S.L con CIF B56843261 y dirección
Av. Altos Hornos S/N. Pto. Sagunto (46520). Valencia, España.
Licenciado por HYUNDAI CORPORATION HOLDINGS, KOREA
info@hyundai-electro.com
avisos@hyundai-electro.com
España 960600034
Portugal 00351300305065