nilson

Automatic Drum Washing Machine

OWNER'S MANUAL

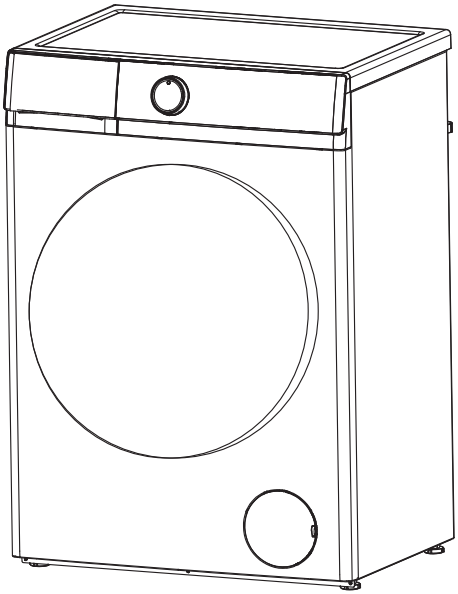

Model: NL10400AI

Thank you for choosing our Washing Machine.

It is essential to read this manual carefully before it is installed and used for the first time.

PREFACE

This washing machine conforms to current safety requirements. Inappropriate use can, however, lead to personal injury and damage to property.
To avoid the risk of accidents and damage to the washing machine, please read this manual carefully before using it for the first time. They contain important information on its installation, safety, use and maintenance.
Keep this manual in a safe place for future reference.

Contents

Safety notices - 1

Parts and features - 4

Installation - 5

The functions of the control panel - 8

How to use washer - 11

Cleanness and maintenance - 13

Troubleshooting guide - 15

Parameters - 17

Electric Diagram - 20

Safety Notices

WARNING



Read and understand thoroughly these safety instructions before use. The items indicated here are very important safety precautions, which must be followed. We cannot be held liable for damage caused by non-compliance with the warning and safety instructions or resulting from incorrect use or operation.

Cleaning and user maintenance shall not be made by children without supervision. Children of less than 3 years should be kept away unless continuously supervised. The new hose-sets supplied with the appliance are to be used and the old hose-sets should not be reused.

This appliance is not intended for use by persons (including children) with reduced physical, sensory or mental capabilities, or lack of experience and knowledge, unless they have been given supervision or instruction concerning use of the appliance by a person responsible for their safety.

Children should be supervised to ensure that they do not play with the appliance.

This appliance can be used by children aged from 8 years and above and persons with reduced physical,sensory or mental capabilities or lack of knowledge if they have been given supervision or instruction concerning use of the appliance in a safe way and under stand the hazards involved.Children shall not play with the appliance.Cleaning and user maintenance shall not be made by children without supervision.

This appliance is intended to be used in household and similar applications.

For washing machines having ventilation openings on the base, the washing machines cannot be washing on the carpet.

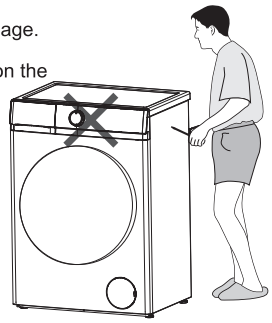

- Before setting the washing machine, check it for any externally visible damage. Do not install or use a damaged washing machine .
- Before connceting the washing machine, ensure that the connection data on the plate(voltage and current)match the electricity supply. if in any doubt, consult a qualifiled electrician.
- The electrical safety of this washing machine can only be guaranteed when continuity is complete between it and an effective earthing system which complies with current local and national safety regulations. It is most important that this basic safety requirement is present and regularly tested, and where there is any doubt the household wiring system should be inspected by a qualified electrician. The manufacturer cannot be held liable for the consequences of an inadequate earthing system.
- Do not connect the washing machine to the mains electricity supply by an extension lead. Extension leads do not guarantee the required safety of the appliance.
- Unauthorized repairs could result in unforeseen dangers for the user, for which manufacturer can not accept liability. Repairs should only be undertaken by an approved service technician. Ensure current is not supplied to the machine until after maintenance of repair work has been carried out.
- **If the supply cord is damaged, it must be replaced by the manufacturer, its service agent or similarly qualified persons in order to avoid a hazard.**

Safety Notices

If the connection cable is damaged or broken, it must only be replaced by an approved service technician to protect the user from danger.
Faulty components must only be replaced by genuine manufacturer original spare parts. Only when these parts are fitted the safety standards of the machine can be guaranteed.

Repairs shall only be carried out by the manufacturer, its service agent or similarly qualified persons in order to avoid a hazard. The producer will not be responsible for damages caused by the intervention of not authorized persons.
Never try repair an appliance which is defective of presumed to be defective. You may put your own and future users' lives in danger.Only authorised specialists are allowed to carry out this repair work.

The measuring pen lights up

- ▶ Please use a qualified special triple socket.
- ▶ Make sure that the ground hole of the three-flat socket is not charged.
- ▶ Make sure that the ground hole of the three-flat socket is effectively grounded.
- ▶ If you do not meet the above conditions, be sure to find a professional electrician to correct before using the washing machine.

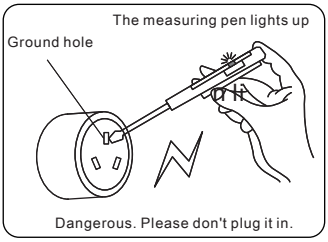

Note **THIS WASHING MACHINE MUST BE EARTHED.**

Technical parameters

Parameter \ Modle	NL10400AI
Power	220-240V~/50Hz
Washing capacity	10kg
Rated power	1600W
Water pressure	0.02-0.8MPa
Net weight / Gross weight	60kg/63kg

The guarantee period of the spare parts is 2 years. If you need replacement, please contact our customer service.

For professional repair, please contact our customer service.

Web	
Address	
Phone number	960600034
Email	info@svanelectro.com

Safety Notices

WARNING

Correct use

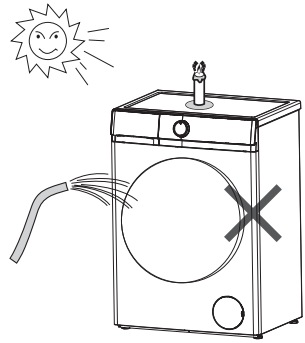

- To avoid the risk of personal injury or damage to the washing machine, do not install it in place where it is damp and where it suffers from rainfall.
- Do not install the washing machine in place where it suffers from the sun directly, in which plastic or components will be damaged. It will be shortened the life of your washing machine.
- Do not install the washing machine in place where temperatures below freezing may occur. Frozen hoses may burst or split. The reliability of the electronic control unit may be impaired at temperatures below freezing point.
- Do not shoot the washing machine with water when you clean it.
- Keep the washing machine away from fire or heat sources.
- Before using the washing machine for the first time, make sure that the transit bolts at the rear of the machine have been removed. During spinning, transit bolts which is still in place may result in damage to both the machine and adjacent furniture or appliances.
- Turn off the tap if the machine is to be left for any length of time (e.g. holiday), especially if there is no floor drain (gully) in the immediate vicinity.
- Take care to ensure that foreign objects (e.g. nails, pins, coins, paper clips) do not find their way into the machine with the laundry. These may damage components of the machine (e.g. drum), which in turn can result in damage to the laundry.
- Do not wash water-repellent things(e.g. raincoats) with washing machine.
- Only remove laundry from the washing machine once the drum has stopped turning. Reaching into a moving drum is extremely dangerous and could result in injury.
- Do not climb onto the washing machine or place items on it to avoid falling and damaging items, as well as deforming the plastic parts on the top cover.
- The electromagnetic door lock can be unlocked for two minutes when the display concludes or the door requires opening, for security purposes.

Safety with children

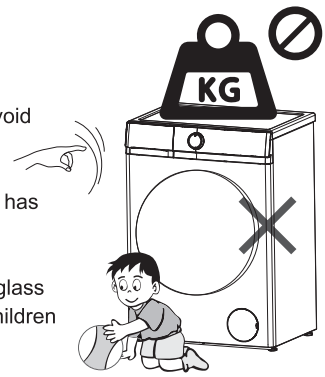

- Keep children away from the washing machine at all times. To avoid the risk of injury do not allow children to play on or near it or to play with its controls. Supervise children whilst you are using it.
- Older children may only use the washing machine if its operation has been clearly explained to them and they are able to use it safely, recognising the dangers of misuse.
- For machines with a 'porthole' door, remember that the porthole glass will be hot when washing at very high temperatures. Do not let children touch it.

Parts and Features

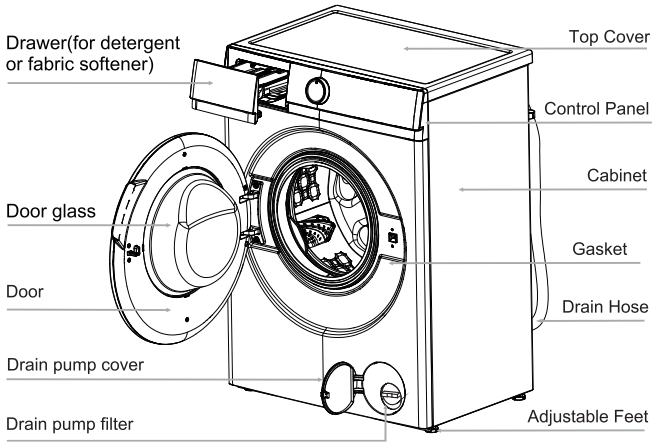

Note **Unscrew the drain pump filter to let water run out when the machine is not used for a long time.**

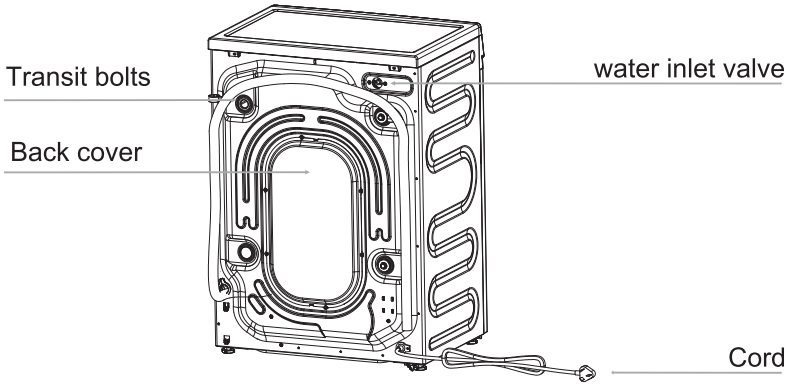

Note

The drawing of machine in the manual is only used for instruction.It may be vary from the mode you buy.
If the supply cord is damaged, it must be replaced by themanufacturer, its service agent or similarly qualified personsin order to avoid a hazard.

Installation

Backout packing

- Remove all the packing(including the foam base) or the vibration and noise may occur.
- Dispose all the wrappage safety and keep them out of the reach of children. Danger of suffocation!
- It is normal that water drops appear on the packing plastic bag and the door glass, which are resulted from the water left in the tub for checking out.

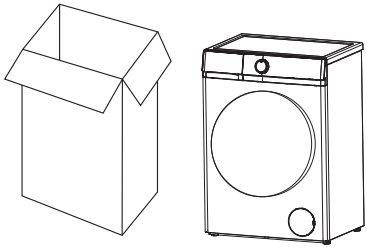

Accessories

Make sure that you have received all of the items shown below.

Accessories	Name	Qty.	Accessories	Name	Qty.
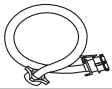	Inlet hose	1	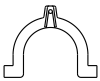	“U” piece	1
	transit bolts caps	4		Manual	1

Removing transit bolts

- Remove all the transit bolts at the back of the machine with tools.
- Plug the holes with the transit bolts caps supplied.

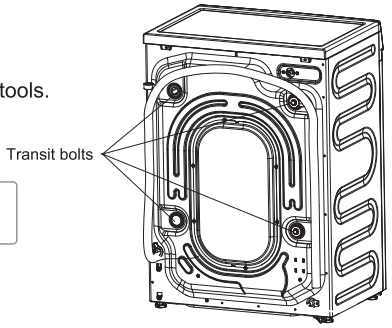

Note **Strong vibration, noise or failures may occur if the transit bolts are not removed.**

- Keep the transit bolts for future transportation. Whenever the machine is transported, the transit bolts must be refitted.

Installation

Installation place requirement

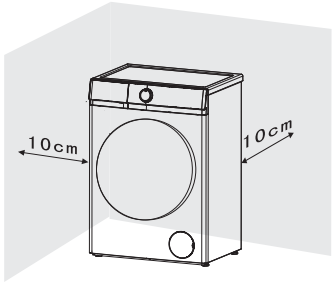

- A concrete floor is the most suitable installation surface for a washing machine, being far less prone to vibration during the spin cycle than wooden floorboards or carpeted surface.
- The machine must be level and securely positioned. The distance between the machine and wall must be more than 10 cm .
- To avoid vibrations during spinning. the machine should not be installed on soft floor coverings.

Level adjustment

The machine must stand perfectly level on all four feet to ensure safe and proper operation. Incorrect installation may cause vibrations and noise and may cause the machine to move about.

To do these when the machine is not level:

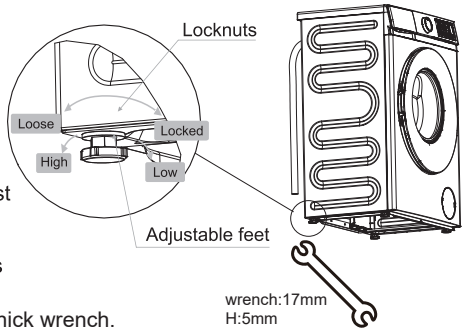

- Using the spanner turn locknut in a clockwise direction. Then turn locknuts together with adjust feet to unscrew.
- Hold adjust feet securely with a pipe wrench. Turn locknut again using the spanner until it sits firmly up against the housing.
- Loosen the locknuts using a 17mm and 5mm thick wrench.

Note **Vibration and noise may occur if the adjustable feet do not sit firmly up against the ground.**

Drain hose connection

1.Direct into a sink

If the outlet spigot has not been used before, remove any blanking plug that may be in place.

Push the drain hose onto the spigot and secure with a clip if required, ensure a loop is formed in the drain hose to prevent waste from the sink entering the washing machine.

If required,the drain hose can be extended to a length of 4 m.

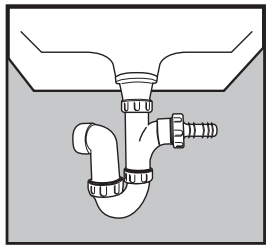

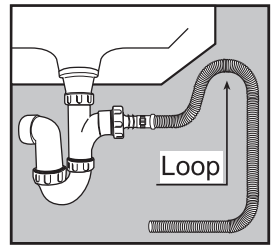

Installation

2. Connected securely to a standpipe
   Firstly form a hook in the end of the drain hose using the “U” piece supplied.
   Place the drain hose into your standpipe, which should have an internal diameter of approximately 30mm thus ensuring there is an air break between the drain hose and standpipe.
   When discharging into a standpipe ensure that the top fo the standpipe is no more than 90cm and no less than 60cm above floor level.



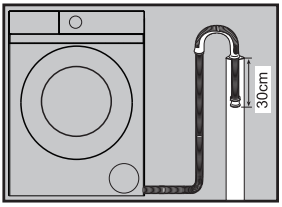

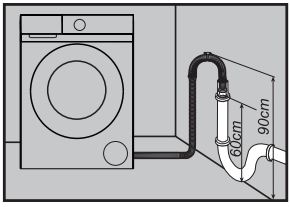

Water inlet connection

Select the appropriate faucet and ensure that the outlet face is flat.

Connect the inlet hose supplied with the machine to a tap with a 3/4" thread.
Do not use previously employed hoses.
Installation should comply with local water authority and building regulations ‘ requirements.

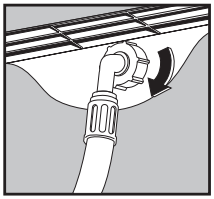

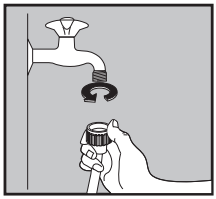

When there is a inlet valve at the back of the machine, it must be connected to a cold water supply.

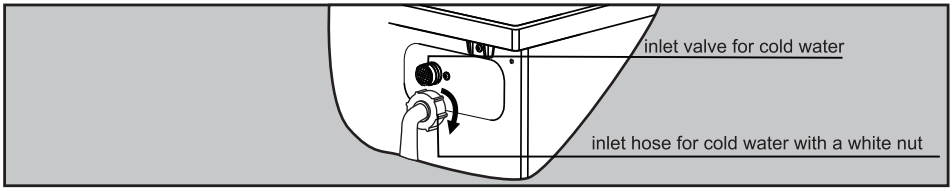

The functions of the control panel

A1 Control Panel

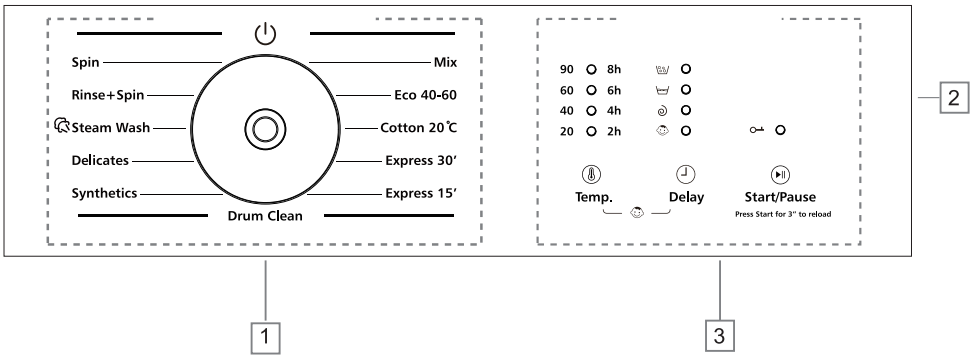

1 Programmes: Page 10 2 Display: Page 8 3 Buttons: Page 9

Display

The display shows the current settings, options or relevant information.

90-20	Temp. : show the temperature of washing.
8h-2h	Delay time: show the delay time of washing.
	Door lock: the light under this icon will be lighting when door lock is working.
	Child lock: the light under this icon will be lighting once child lock function is selected.
	Washing phase: the light above this icon will flicker during the washing phase.
	Rinse phase: the light above this icon will flicker during the rinse phase.
	Spin and drain phase: the light above this icon will flicker during the spin and drain phase.

The functions of the control panel

Buttons

The following is the instruction of the buttons and their setting options.

1.Temp.

Press this button repeatedly to change the wash temperature.

2.Delay

Press this button repeatedly to change the delay time.

3.Start/pause (⏯)

Press this button to start or pause a wash cycle. To reload the laundry during a wash cycle,press this button for 3 seconds, and the machine will drain if the water level is too high.(PTC door lock has no key to add clothing function） The reload function is unavailable if the temperature of the water is too high.

4.Child lock("Temp."+"Delay")

When the machine starts, press the "Delay" and "Temp" buttons at the same time for 3 seconds, the child lock indicator light up, the function takes effect. Press the same button for another 3 seconds to cancel this feature. When the child lock function is in effect, only the shutdown gear is effective, and the other keys are invalid.

⚠ Note	For your safety,Do not choose the “⏻”button and get out clothes while the machine is running. Because the temperature of water may be high and it may scald you. The door lock will open automatically at the end of a wash cycle while the temperature of the drum is cool down.

The functions of the control panel

Programs

Options and functions for programs

10KG

Program	Max.Load	Max Temp (℃)	Max Spin speed(rpm)	Type of Wash and Recommendations
Mix	8	60	800	Lightly to normally soiled robust laundry made of cotton, linen, artificial fibers and their blends. Only wash similar colors together in one wash load.
Eco 40-60	10	--	1400	Normally soiled cotton laundry. Most favorable program in terms of combined water and energy consumption. Basis for the values indicated on the Energy Label.
Cotton 20℃	10	20	800	Cottons, linens or cotton mix fabrics
Express 30'	5	--	800	Small loads of items which require freshening up and which can be washed in a Cotton program.
Express 15'	2.5	--	800	Small loads of items which require freshening up and which can be washed in a Cotton program.
Drum Clean	0	90	600	This program is used to clean the drum. Do not put any clothes into the drum while running this program.
Synthetics	6	60	800	Synthetic or mixed fabrics, underwear, colored garments, non-shrink T-shirts
Delicates	2.5	40	600	Fine laundry made of delicate fabrics or silk, which needs gentle treatment
Steam Wash	5	90	800	Cottons, underwear, sheet, pillows, children's clothes.
Rinse+Spin	--	--	1000	This program can be used for rinsing garments . Do not add any detergent.
Spin	--	--	1400	Separate spin for cotton and linen items.

Noise and remaining moisture content are influenced by the spinning speed: the higher the spinning speed in the spinning phase, the higher the noise and the lower the remaining moisture content.

How to use washer

Use process

Before washing clothes for the first time, you must run a complete cycle without clothes. To do these:

1.Connect the power and turn on the tap.
2.Choose the button " ⏻ " to turn on the machine and choose the program "Cotton 20℃".
3.Press the button "Start/Pause" .

It can remove the water out which left in the tub because of manufacturer's checking out.

Washing preparation

1.Connect the inlet hose well and turn on the tap.
2.After making sure the power socket is grounded reliably, insert the power plug into the power socket.
3.Place the drain hose well.

Preparation of clothes

1. Sort the laundry by color and by care label. Most garments have a textile care label in the collar or side seam.
2. Make sure all the pockets are empty, Foreign objects (e.g. nails, coins, paper clips, etc.) can cause damage to garments and components in the machine.
3. Close any zips, fasten hooks and eyes etc before washing.
4. Dark textiles often contain excess dye and should be washed separately several times before being included in a mixed load. Always wash whites and coloureds separately.
5. Badly soiled areas, stains etc. should be pre-treated with liquid detergent, stain removers etc.
6. Turn over the clothes which pill easily and is with woolen surface before putting them into the machine.



Diagram 1



Diagram 2



Diagram 3

Put clothes into the washer

Unfold the laundry and load loosely in the drum. Mixing both large and small items gives better wash results and also helps distribute the load evenly during spinning. The most efficient use of energy and water is achieved when a full load is washed. However, do not overload as this causes creases and reduces cleaning efficiency.

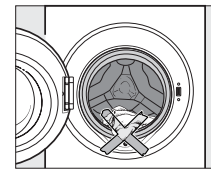

Note **Make sure that no garments are nipped between the door and the seal.**

How to use washer

Using the detergent drawer

1. Open the drawer and add adequate detergent into main wash compartment marked "\II/" or " II".
2. Add the fabric softener into compartment marked "\❀/ " or "❀ " .
   Do not exceed the maximum level mark.
3. Close the drawer.

The right amount to dispenser will depend on the following:

- The quantity of laundry
- The soiling level of the laundry
  - Lightly soiled
    No visible dirt or stains. Possibly slight body odour.
  - Normally soiled
    Visibly dirty and/or just a few slight stains.
  - Heavily soiled
    Visible dirt and stains and/or dried on soiling.
- The water hardness level.

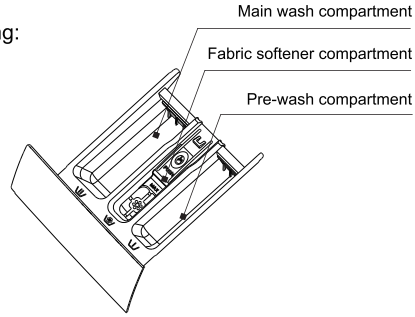

Note | **It is recommended to use low foaming powder for all washing temperature programs.**

Washing steps

1.Turn on the water tap, and connect the power.
2.Open the door, and put the cloth into the drum one by one.
3.Close the door, and put suitable amount of detergent and fabric softener into the dispenser, then close the drawer.
4.Choose a program you need .
5.Press " Start/Pause" button to start the washing machine.
6.When the cycle is finished, there is a warning tone sound.

Note | **When washing cycle is finished, the machine will change into standby mode. And the machine will be sleeping after 10 minutes without any control on the control panel.**

Note | **The machine is fitted with a balance control device, which ensures the machine is stable during the spin. To protect the machine, it will cut in if the laundry is not evenly distributed in the drum. The laundry is redistributed by reverse rotation of the drum. This may happen several times before the unbalance disappears and normal spinning can resume. If, after about 20 minutes, the laundry is still not evenly distributed in the drum, the machine will not spin. In this case, redistributed the load manually and reselect the spin program.**

How to use washer

Use process

Door lock

- When the machine is started , the door lock is locked
- When the temperature inside the durm is above 60℃, the door lock is locked.
- When the water is above a certain level, the door lock is locked.
- When the washing cycle is finished, the door lock is unlocked.

Important:
Do not try to open the door when the washing cycle is not finished or power supply is cut off during the washing cycle, because the temperature may be high and you may be scalded.

Cleanness and Maintenance

Use process

Disconnect the machine from the mains electricity supply and withdraw the plug from the socket before cleaning the machine.

The washing machine must not be hosed down.

Cleaning the exterior

Clean the exterior with a mild non-abrasive cleaning agent or soap and water using a well wrung-out cloth. Wipe dry with a soft cloth.

Do not use solvents, abrasive cleaners, glass cleaners or all-purpose cleaning agents. These might damage plastic surfaces and other components because of the chemicals they contain.

The washing drum

Clean the drum every 3 months by using the “Drum Clean” programme.

Cleaning the drawer

Remove detergent residues regularly. Clear the drawer following these:

- Pull out the drawer until a resistance is felt. Press down the release catch and at the same time pull the drawer right out of the machine.
- Remove the siphon from compartment and clean it.
- Clean the dispenser using a brush and warm water.

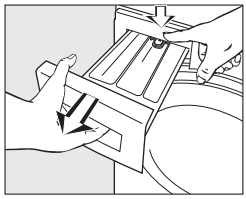

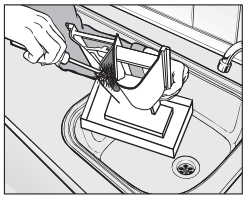

Cleanness and Maintenance

After use

Cleaning the drawer housing

Use a bottle brush to remove detergent residues inside the drawer housing.

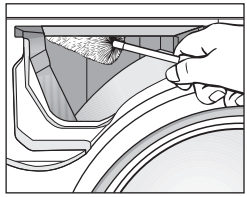

Cleaning the water inlet filter

Use pointed nose pliers to withdraw the plastic filter. Clean, put back secure. These filter should be checked every 6 months or so, or more often if there are frequent interruptions to the water supply.

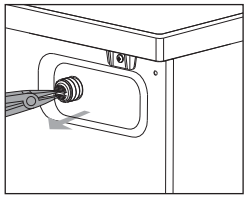

Note **The filter must be put back in place after cleaning.**

Cleaning the drain pump filter

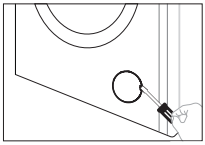

1.Disconnect the machine, from the mains electricity supply , pick the bullet arm of the lock buckle with a flat screwdriver and open the lower cover.



2. Place a container under the pump.Unscrew and remove the filter.

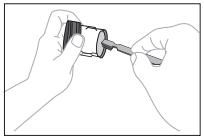

3. Clean the filter carefully

Important:

If the machine is exposed to temperatures below 0°C, certain precautions should be taken.

Note **The filter should be cleaned every 2 months or when there is fault that the " ○ ○ ● ● " is on the screen.**

Troubleshooting guide

Difficult explanation

Problem	Error Code	Possible Cause	Solutions
The water of machine fills overtime.	○ ● ● ●	1. Water tap is not open. 2. Drain hose is put down. 3. Water inlet valve is damaged.	1. Open the water tap. 2. Hook up the hose. 3. Change the water inlet valve.
There is a Door lock alarm.	● ○ ● ●	1. The door is not locked well. 2. Garments is caught between the door and seal. 3. Door lock is damaged.	1. Lock the door well. 2. Put the garment into the drum. 3. Change the door lock.
The machine drains overtime.	○ ○ ● ●	1. The drain hose is squashed or kinked. 2. The drain pump filter is block. 3. The drainage system pipes are blocked.	1. Check the drain hose. 2. Clean the filter. 3. Check the drainage system and clean it.
Water overflows the machine. / Water sensor works abnormal.	● ● ○ ●	1. The water inlet valve is damaged. 2. The connection between the water sensor and wire is not secure. 3. The water sensor is damaged.	1. Change the water inlet. 2. Check the connection and ensure it is secure. 3. Change the water sensor.
The motor does not work.	○ ● ○ ●	1. The connection between the motor and wire is not secure. 2. The motor is protected because of over-heat. 3. The motor is damaged.	1. Check the connection and ensure it is secure. 2. Check if the machine is overloaded. Switch off the machine, and retry when the motor becomes cool. 3. Change the motor.
There is a heater fault.	● ○ ○ ●	1. The connection between the heater and wire is not secure. 2. The heater is damaged.	1. Check the connection and ensure it is secure. 2. Change the heater.
There is a temperature sensor fault.	○ ○ ○ ●	1. The connection between the temperature sensor and wire is not secure. 2. The temperature sensor is damaged.	1. Check the connection and ensure it is secure. 2. Change the temperature sensor.
Voltage anomaly	● ● ● ○	1. The mains voltage is too high or too low	Shut down and restart after voltage recovery
Communication failure	○ ● ● ○	1. The communication line is damaged 2. The display board is damaged	1. Check whether the communication lines and wiring terminals are damaged 2. Replace the display board

Troubleshooting guide

Difficult explanation

Problem	Error Code	Possible Cause	Solutions
Variable frequency board fault	● ○ ● ○	1. The circuit of the frequency conversion board is damaged 2. The frequency conversion board is faulty	1. Check whether the wiring terminals of the frequency conversion board are damaged 2. Replace the frequency converter

● --- darkness ○ --- flicker

Parameters

10KG

<table>
<tr><th colspan="6">Content, order and format of the product information sheet</th></tr>
<tr><td colspan="6">General product parameters:</td></tr>
<tr><td>Parameter</td><td colspan="2">Value</td><td>Parameter</td><td colspan="2">Value</td></tr>
<tr><td rowspan="3">Rated capacity (b) (kg)</td><td colspan="2" rowspan="3">10.0</td><td rowspan="3">Dimensions in cm (a), (c)</td><td>Height</td><td>85</td></tr>
<tr><td>Width</td><td>60</td></tr>
<tr><td>Depth</td><td>52</td></tr>
<tr><td>Energy efficiency index (b) (EEIW)</td><td colspan="2">52.0</td><td>Energy efficiency class (b)</td><td colspan="2">A</td></tr>
<tr><td>Washing efficiency index (b)</td><td colspan="2">1.031</td><td>Rinsing effectiveness (g/kg) (b)</td><td colspan="2">5.0</td></tr>
<tr><td>Energy consumption in kWh per cycle, based on the eco 40-60 programme at a combination of full and partial loads. Actual energy consumption will depend on how the appliance is used.</td><td colspan="2">0.514</td><td>Water consumption in litre per cycle, based on the eco 40-60 programme at a combination of full and partial loads. Actual water consumption will depend on how the appliance is used and on the hardness of the water.</td><td colspan="2">42</td></tr>
<tr><td rowspan="3">Maximum temperature inside the treated textile (b) (°C)</td><td>Rated capacity</td><td>35</td><td rowspan="3">Weighted remaining moisture content (b) (%)</td><td colspan="2" rowspan="3">53.9</td></tr>
<tr><td>Half</td><td>27</td></tr>
<tr><td>Quarter</td><td>26</td></tr>
<tr><td rowspan="3">Spin speed (b) (rpm)</td><td>Rated capacity</td><td>1400</td><td rowspan="3">Spin-drying efficiency class (b)</td><td colspan="2" rowspan="3">B</td></tr>
<tr><td>Half</td><td>1400</td></tr>
<tr><td>Quarter</td><td>1400</td></tr>
<tr><td rowspan="3">Programme duration (b) (h:min)</td><td>Rated capacity</td><td>3:58</td><td rowspan="3">Type</td><td colspan="2" rowspan="3">Free-standing</td></tr>
<tr><td>Half</td><td>3:00</td></tr>
<tr><td>Quarter</td><td>3:00</td></tr>
<tr><td>Airborne acoustical noise emissions in the spinning phase (b) (dB(A) re 1 pW)</td><td colspan="2">72</td><td>Airborne acoustical noise emission class (b) (spinning phase)</td><td colspan="2">A</td></tr>
<tr><td>Off-mode (W) (if applicable)</td><td colspan="2">0.50</td><td>Standby mode (W) (if applicable)</td><td colspan="2">0.50</td></tr>
<tr><td>Delay start (W) (if applicable)</td><td colspan="2">4.00</td><td>Networked standby (W) (if applicable)</td><td colspan="2">N/A</td></tr>
<tr><td colspan="6">Minimum duration of the guarantee offered by the supplier (a), (c): 12 months</td></tr>
<tr><td colspan="5">This product has been designed to release silver ions during the washing cycle</td><td>No</td></tr>
<tr><td colspan="6">Additional information (a), (c) : Weblink to the supplier's website, where the information in point 9 of Annex II to Commission Regulation (EU) 2019/2023(1) is found:</td></tr>
<tr><td colspan="6">(a) this item shall not be considered relevant for the purposes of Article 2(6) of Regulation (EU) 2017/1369.
(b) for the eco 40-60 programme.
(c) changes to this item shall not be considered relevant for the purposes of paragraph 4 of Article 4 of Regulation (EU) 2017/1369.
(d) if the product database automatically generates the definitive content of this cell, the supplier shall not enter these data.</td></tr>
</table>

Parameters

10KG

PARAMETER	UNIT	VALUE
Rated capacity for the Eco 40-60 programme, at 0.5 kg intervals	kg	10.0
Energy consumption of the Eco 40-60 programme at rated capacity	kWh/cycle	1.000
Energy consumption of the Eco 40-60 programme at half rated capacity	kWh/cycle	0.440
Energy consumption of the Eco 40-60 programme at quarter rated capacity	kWh/cycle	0.230
Weighted energy consumption of the Eco 40-60 programme	kWh/cycle	0.514
Standard energy consumption of the Eco 40-60 programme(SCEw)	kWh/cycle	0.988
Energy Eficiency Index	–	52.0
Water consumption of the Eco 40-60 programme at rated capacity	L/cycle	50.0
Water consumption of the Eco 40-60 programme at half rated capacity	L/cycle	45.0
Water consumption of the Eco 40-60 programme at quarter rated capacity	L/cycle	36.0
Weighted water consumption	L/cycle	42
Washing efficiency index of the Eco 40-60 programme at rated capacity	–	1.031
Washing efficiency index of the Eco 40-60 programme at half rated capacity	–	1.031
Washing efficiency index of the Eco 40-60 programme at quarter rated capacity	–	1.031
Rinsing effectiveness of the Eco 40-60 programme at rated capacity	g/kg	5.0
Rinsing effectiveness of the Eco 40-60 programme at half rated capacity	g/kg	5.0
Rinsing effectiveness of the Eco 40-60 programme at quarter rated capacity	g/kg	5.0
Programme duration of the Eco 40-60 programme at rated capacity	h:min	3:58
Programme duration of the Eco 40-60 programme at half rated capacity	h:min	3:00
Programme duration of the Eco 40-60 programme at quarter rated capacity	h:min	3:00
Temperature reached for minimum 5 min inside the load during Eco 40-60 programme at rated capacity	℃	35
Temperature reached for minimum 5 min inside the load during Eco 40-60 programme at half rated capacity	℃	27
Temperature reached for minimum 5 min inside the load during Eco 40-60 programme at quarter rated capacity	℃	26

Parameters

10KG

PARAMETER	UNIT	VALUE
Spin speed in the spinning phase of the Eco 40-60 programme at rated capacity	rpm	1400
Spin speed in the spinning phase of the Eco 40-60 programme at half rated capacity	rpm	1400
Spin speed in the spinning phase of the Eco 40-60 programme at quarter rated capacity	rpm	1400
Weighted remaining moisture content	%	53.9
Airborne acousitcal noise emissions during Eco 40-60 programme(spinning phase)	dB(A) re 1 pW	72
Power consumption in ‘off mode’	W	0.50
Power consumption in ‘standby mode’	W	0.50
Does ‘standby mode’include the display of information?	—	No
Power consumption in ‘standby mode’ in condition of network standby (if applicable)	W	N/A
Power consumption in ‘delay start’(if applicable)	W	4.00

Power	220-240V~,50Hz
Rated Power	**1600W**
Water Pressure	**0.02-0.8MPa**
Net Weight /Gross Weight	**60kg/63kg**
Outer dimension(WxDxH)mm	**647X575X890**

The Eco 40-60 programme is able to clean normally soiled cotton laundry declared to be washable at 40℃ or 60℃,together in the same cycle,and that this programme is used to assess the compliance with the EU Ecodesign legislation.

The most efficient programmes in terms of energy consumption are generally those that perform at lower temperatures and longer duration.

Electric Diagram

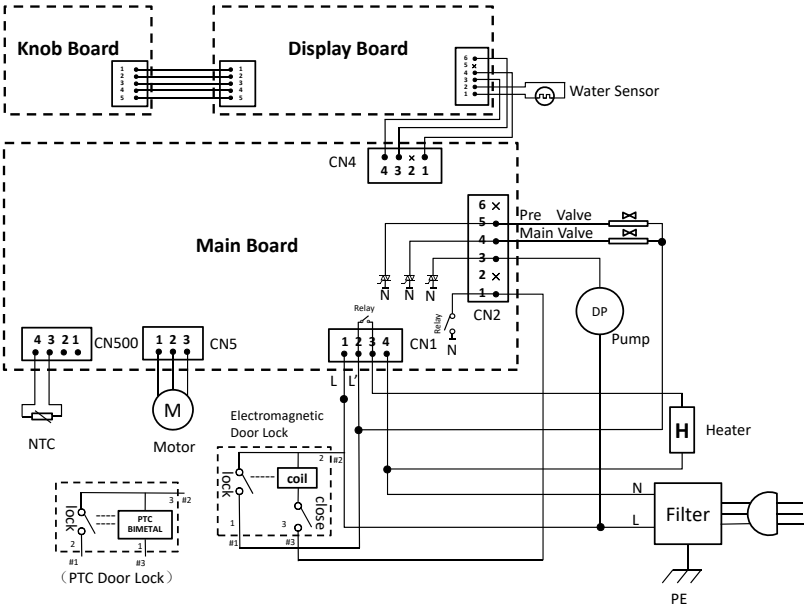

Correct Disposal of this product



This symbol on the product, or in its packaging. indicates that this product may not be treated as household waste. Instead, it should be taken to the appropriate waste collection point for the recycling of electrical and electronic equipment, By ensuring this product is disposed of correctly. you will help prevent potential negative consequences for the environment and human health, which could otherwise be caused by the inappropriate waste handing of this product, For more detailed information about the recycling of this product, please contact your local council, your household waste disposal service, or the shop where you purchased the product.

Important:

If the machine is exposed to temperatures below 0°C, certain precautions should be taken.

1. **Turn off the water tap.**
2. **Unscrew the inlet hose.**
3. **Unhook the drain hose from the rear support and position the end of this hose and that of the inlet hose in a bowl. Run the spin programme.**
4. **Disconnect the appliance.**
5. **Screw the inlet hose and reposition the drain hose.**
6. **When you intend to start the machine up again, make sure that the room temperature is above 0°C.**

SVAN TRADING S.L.

Imported by B73737553
Av. Altos Hornos S/N. Pto. Sagunto (46520). Valencia, España.
info@svanelectro.com
960600034