PROTECT YOUR WARRANTY
Read this manual carefully and keep it for future reference



Balcony Solar Kits

Quick Installation Manual

Reference: SSRSB04K/SSRSB08K

1. Cautions

- Ensuring that there are no less than two persons working on the system installation;
- Ensuring that the guard bar of balcony can support the array weight.
- Please check the micro inverter, the cables, and solar modules for visible damages before starting to connect the system. If visible damages show, please contact our support before continuing.;
- Please make sure that all bolts and fasteners are properly fastened before mounting the solar panel. If bolts are loose, then there is a risk that it can drop the solar panel and create dangerous situation below the balcony.;
- Please make sure the bracket is fixed to balcony both in top and in the bottom so it can withstand stormy weather.
- Recycling according the local regulation;
- This appliance is intended for domestic use only !

2. Contents

1. Cautions Page 1
2. Contents Page 2
3. System Overview Page 3
4. Tools Page 4
5. Components Page 5
6. Details of System
   - 6.1 Micro Inverter Terminals Page 6
   - 6.2 Micro Inverter Package List Page 6
   - 6.3 Mounting Package List Page 7-8
7. System Installation
   - 7.1 Hooks Installation Page 9-10
   - 7.2 Horizontal Beam and Micro Inverter Installation Page 10
   - 7.3 Horizontal Beam Installation(Only for 800W System) Page 11
   - 7.4 Support Rob Installation Page 11-12
   - 7.5 PV Connection Page 12
   - 7.6 Fixing Kit to Balcony Page 12-13
   - 7.7 PV Connection(Only for 800W System) Page 14
   - 7.8 AC Connection Page 14
8. Mounting
   - 8.1 Installation of the APP Page 15-17
   - 8.2 LED Working Status Page 18
9. Micro Inverter Technical Data Page 19
10. Other Information Page 20

3. System Overview

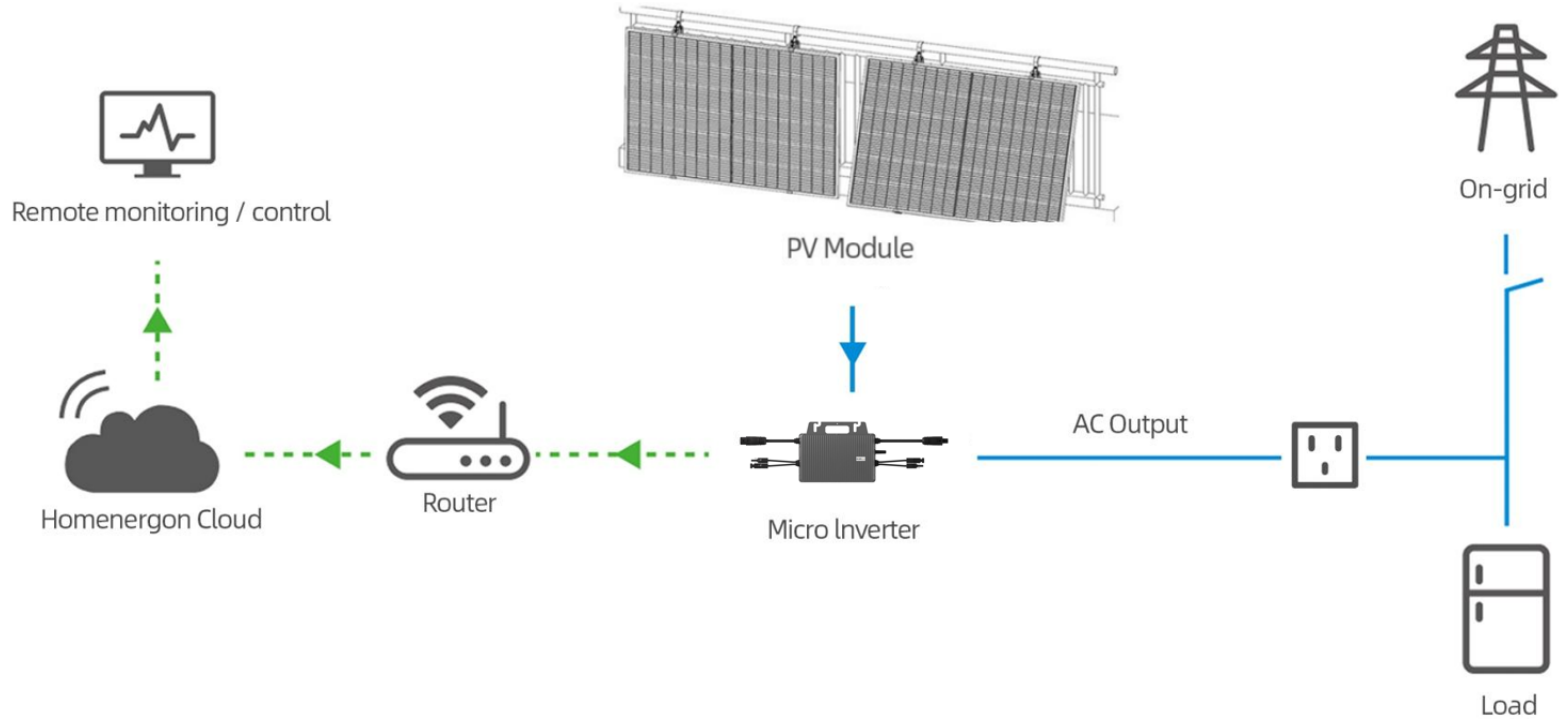

NOTE:The illustrations are images for reference,your device may differ

4. Tools (Included)



5mm Allen Key * 1



13mm Wrench * 1



13mm Socket Wrench * 1

NOTE:The illustrations are images for reference,your device may differ

5. Components

Item No.	Item Name	Item Descriptions	Quantity	
			400W Sys	800W Sys
C-01	 400W Micro Inverter	**Model：TSOL-MS400 Balcony** Max. Input Power: 550W Mppt Voltage Range: 16-60V Max Input Current: 1*14A Max. Output Power: 400W Nominal Output Voltage: 230V a.c Nominal Frequency: 50Hz/60Hz Nominal MPPT Efficiency: 99.9%	1 Unit	/
C-02	 800W Micro Inverter	**Model：TSOL-MS800 Balcony** Max. Input Power: 1100W Mppt Voltage Range: 16-60V Max Input Current: 2*14A Max. Output Power: 800W Nominal Output Voltage: 230V a.c Nominal Frequency: 50Hz/60Hz Nominal MPPT Efficiency: 99.9%	/	1 Unit
C-03	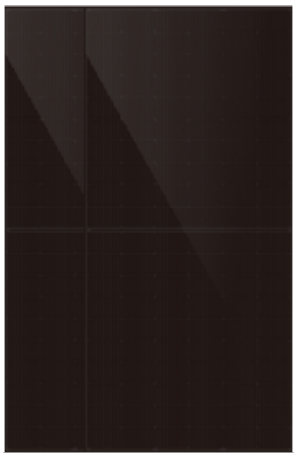 PV Module	Max. Power: 410 W Short Circuit Current(Isc): 13.85A Open Circuit Voltage(Voc): 37.6V Product Size: 1722*1134*30mm Weight: 20.5Kg	1 PCS	2 PCS
C-04	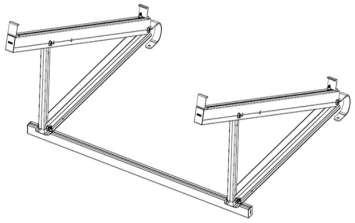 Mounting Kit	Color: Black Material: Aluminum alloy	1 Sets	2 Sets

NOTE:The illustrations are images for reference,your device may differ

6. Details Of System

6.1 Micro Inverter Terminals

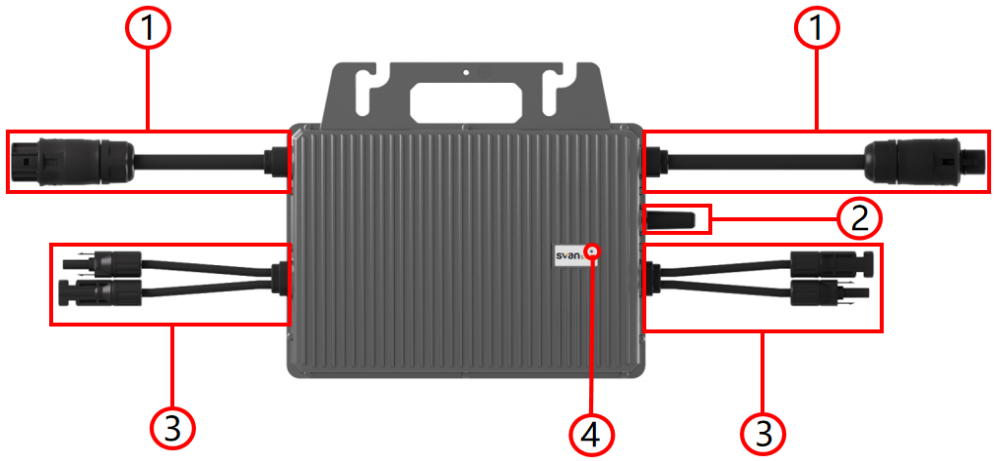

1: AC Connector
2: Antenna
3: DC Connector
4: Indicator Light

6.2 Micro Inverter Package List

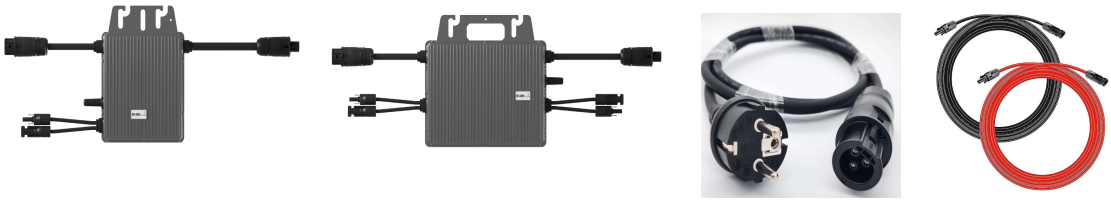

① ② ③ ④

400W System		
SN	Item Name	Qty
I-01	400W Micro Inverter	1
I-03	AC Plug	1

800W System		
SN	Item Name	Qty
I-02	800W Micro Inverter	1
I-03	AC Plug	1
I-04	PV Cabel (1 Black & 1 Red)	2

NOTE:The illustrations are images for reference,your device may differ

6.3 Mounting Package List

Item No.	Item Name	Item Descriptions	Quantity	
			400W Sys	800W Sys
M-01	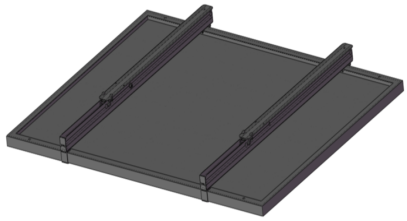 **Pre Installation Mounting**	**Mounting Including**  Bottom Beam 2 PCS  Support Rod 2 PCS  Main Beam 2 PCS Color: Black Material: Aluminum alloy	1 Sets	2 Sets
M-02	 **Horizontal Beam**	Color: Black Material: Aluminum alloy	1 PCS	2 PCS
M-03	 **Hook**	Color: Black Material: Steel Size: Φ63mm Circular hook(2PC) Size: Wide 130mm Square hook(2PC)(Optiional)	4 PCS	8 PCS
M-04	 **Clamping Plate**	Color: Black Material: Steel	2 PCS	4 PCS
M-05	 **External Hexagonal Bolt**	Color: Black Material: Steel Size: M8X25mm(4PC) Size: M8X35mm(4PC)	8 PCS	16 PCS

NOTE:The illustrations are images for reference,your device may differ

6.3 Mounting Package List

Item No.	Item Name	Item Descriptions	Quantity	
			400W Sys	800W Sys
M-06	 Carriage Bolt	Color: Black Material: Steel Size: M8X80mm(2PC) M8X110mm(2PC)	4 PCS	8 PCS
M-07	 Extended Nut	Color: Black Material: Steel Size: M8X30mm	4 PCS	8 PCS
M-08	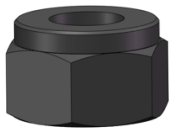 Anti loosening nut	Color: Black Material: Steel Size: M8	8 PCS	16 PCS
M-09	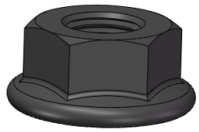 Flange Nut	Color: Black Material: Steel Size: M8	5 PCS	10 PCS
M-10	 Square Head Bolt	Color: Black Material: Steel Size: M8X12mm(4PC) Size: M8X25mm(6PC)	10 PCS	20 PCS
M-11	 Pan Head Bolt	Color: Black Material: Steel Size: M8X15	3 PCS	6 PCS
M-12	 Steel wire rope	Color: silvery Material: Stainless steel Size: D2X40mm	1 PCS	2 PCS

NOTE:The illustrations are images for reference,your device may differ

7. System Installation

7.1 Hooks Installation

7.1.1 Open balcony solar kit package and take out all the compotents and pre intallation mounting, Place the PV module of pre installation mounting facing downwards. Remove the two M8X50mm external bolts fixing each bottom beam, take out the bottom beam and prepare to install the hook, as shown in the figure below:

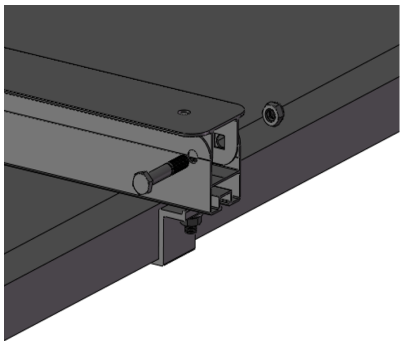

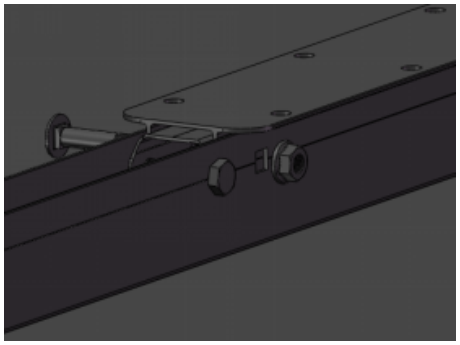

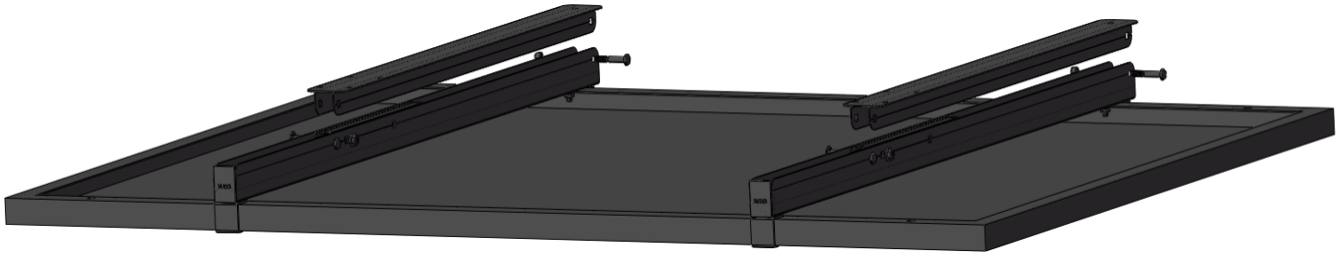

7.1.2 Intall the hooks suiting your Balcony railing to the bottom beam with M8X15mm pan head bolts and Anti loosening nuts. Ensure that the hook side hole is aligned with the bottom beam side hole when tightening the pan head screw





NOTE:The illustrations are images for reference,your device may differ

7. System Installation

7.1 Hooks Installation

7.1.3 Insert the M8X50mm external hexagonal bolt moving from this place through the side hole and tighten it with a anti loosing nut

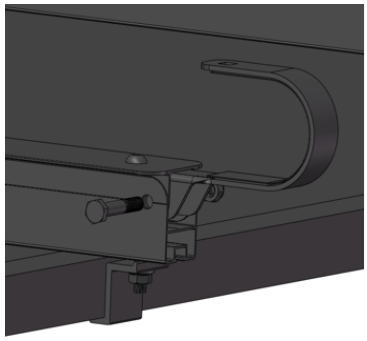

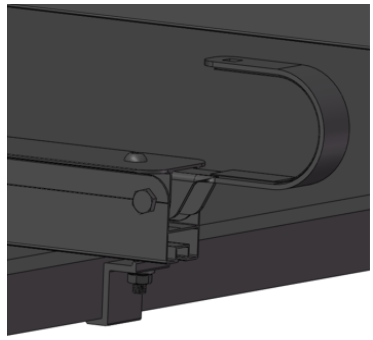

7.2 Horizontal Beam and Micro Inverter Installation

Install the M8X25mm square head bolts and anti lossing nuts in the two holes at the end of the bottom beam and the micro inverter without tightening them, leaving enough height for the horizontal beam to pass through. Keep the square head bolts consistent with the track of the horizontal beam, firstly insert two square head bolts of the bottom beam into the beam track, and then insert two square head bolts of the micro inverter into the beam track，and finally insert the last two square head bolts of the bottom beam into the beam track ，and tighten the bolts.



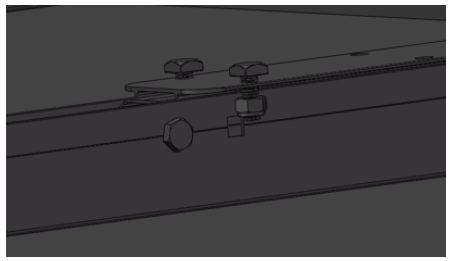

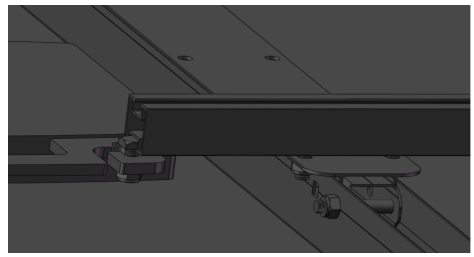

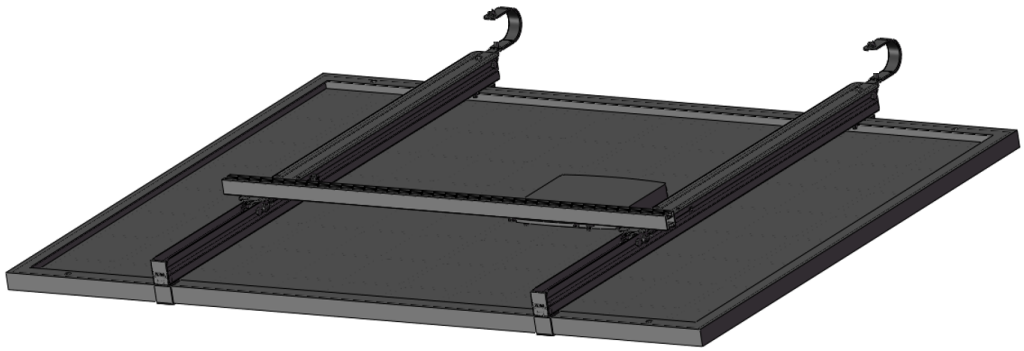

NOTE:The illustrations are images for reference,your device may differ

7. System Installation

7.3 Horizontal Beam (Only for 800W System)

Install the M8X25mm square head bolts and anti lossing nuts in the two holes at the end of the bottom beam without tightening them, leaving enough height for the horizontal beam to pass through. Keep the square head bolts consistent with the track of the horizontal beam, firstly insert two square head bolts of the bottom beam into the beam track, and finally insert the last two square head bolts of the bottom beam into the beam track , and tighten the bolts.

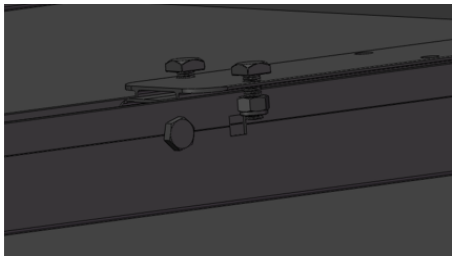

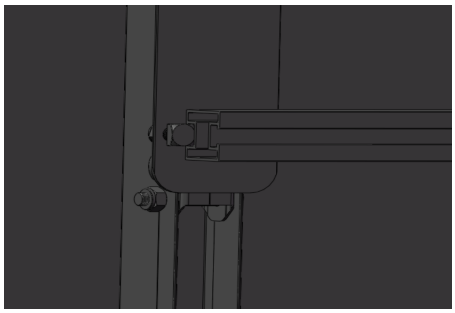

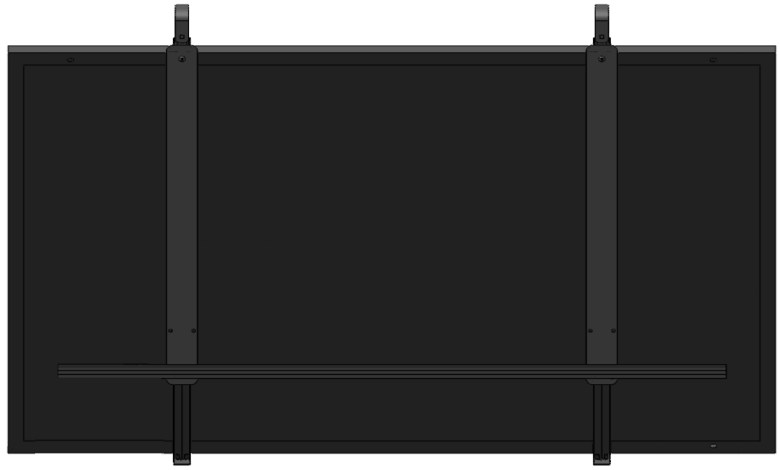

7.4 Support Rod Installation

Take out the other end of the support rod that is not fixed, align the square hole of the bottom beam with the circular hole of the support rod, and install the carriage bolt pair that was removed during the installation of the hook. During installation, the square head of the carriage bolt needs to be clamped into the square hole.

When installed at 0 degrees: No need to unfold the support rod, just restore the carriage bolt pair and tighten it

Install the steel wire rope buckle onto the PV module on the same side of the hook using a pan head bolt and a flange nut.

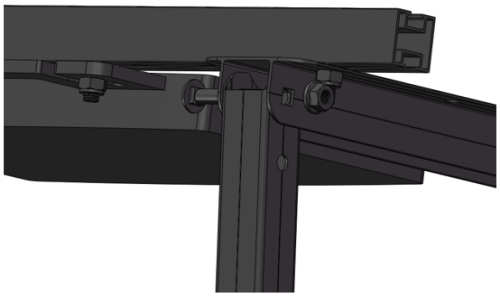

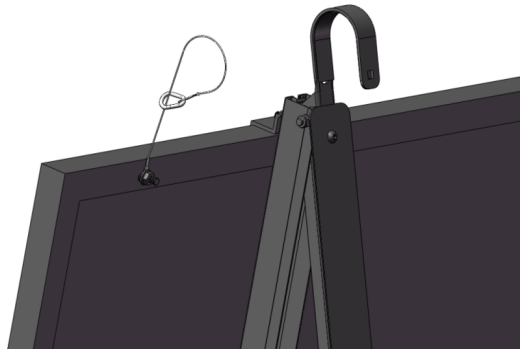

NOTE:The illustrations are images for reference,your device may differ

7. System Installation

7.4 Support Rod Installation

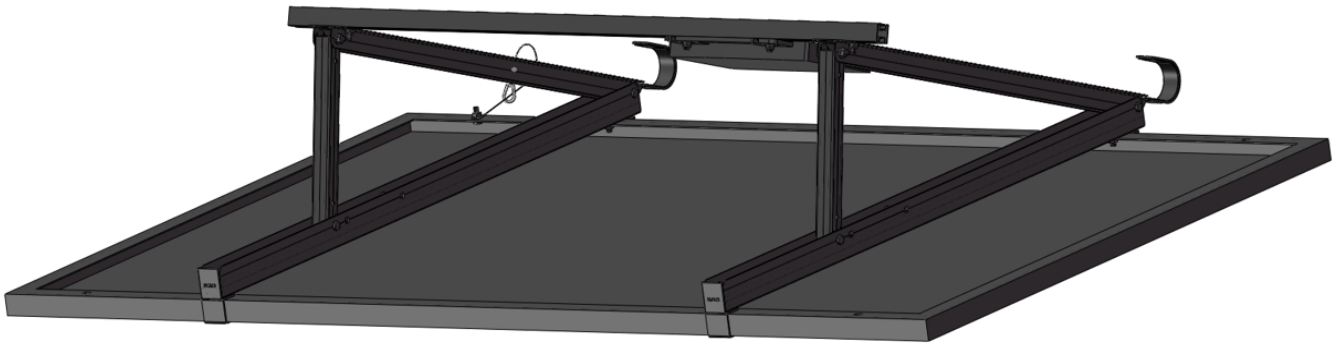

7.5 PV Connection

Plug the MC4 plug of the PV module into one of the two pairs of MC4 connectors of the micro inverter,





7.6 Fixing Kit to Balcony

7.5.1 Two people are needed to hang the Kit on the guardrail, then wrap the steel wire rope around the guardrail and fasten it. Use M8X80 carriage bolts to pass through the hole above the hook, and then lock it with M8 flange nuts

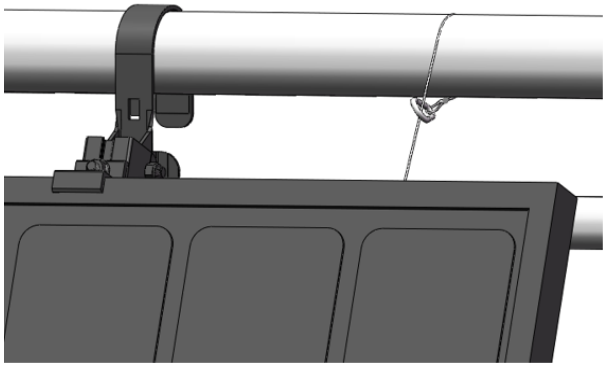

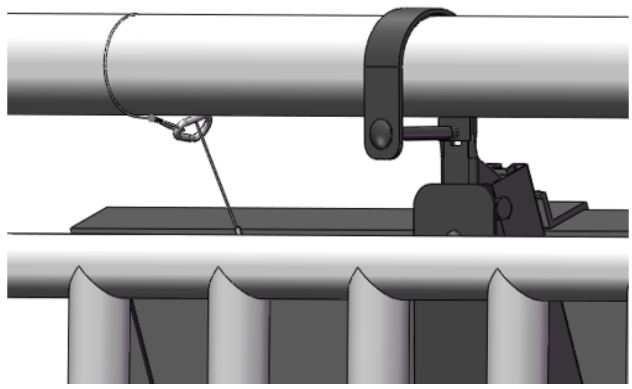

NOTE:The illustrations are images for reference,your device may differ

7. System Installation

7.6 Fixing Kit to Balcony

7.5.2 Gently lift and rotate this kit, insert two square head bolts M8X12 from one end of the horizontal beam track and place them on both sides of the vertical railing

Tighten the M8X30 extended nuts, clamp plates, M8X25 External Hexagonal bolts (railing diameter 30-45mm) or M8X35mm External Hexagonal bolts (railing diameter 45-60) on the square head bolt in sequence. Secure the components to the railing



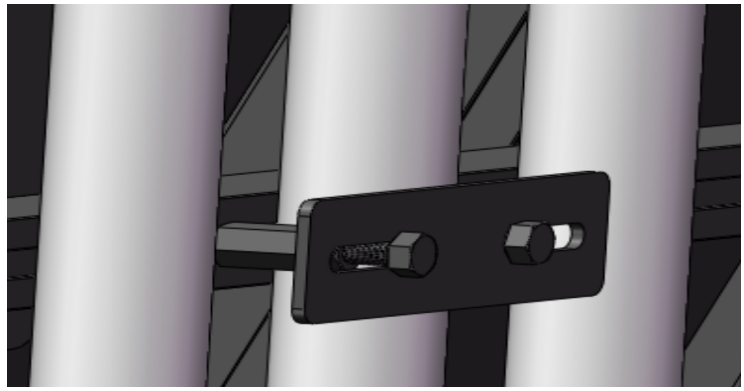

Complete the installation as shown in the image below:

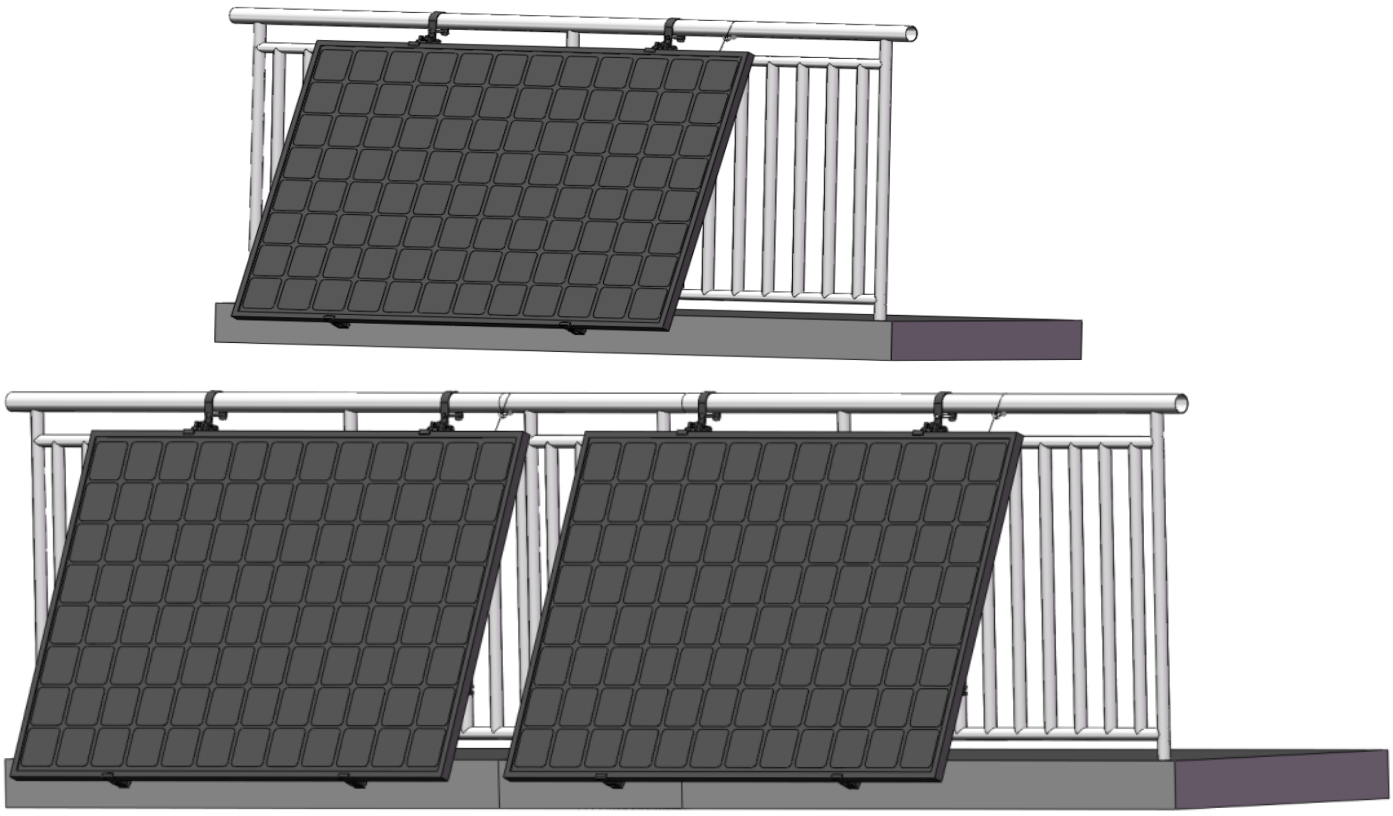

NOTE:The illustrations are images for reference,your device may differ

7. System Installation

7.7 PV Connection (Only for 800W System)

Connect the DC line of the PV module mounting system without Micro Inverter to another pair of MC4 connectors on MicroInverter.

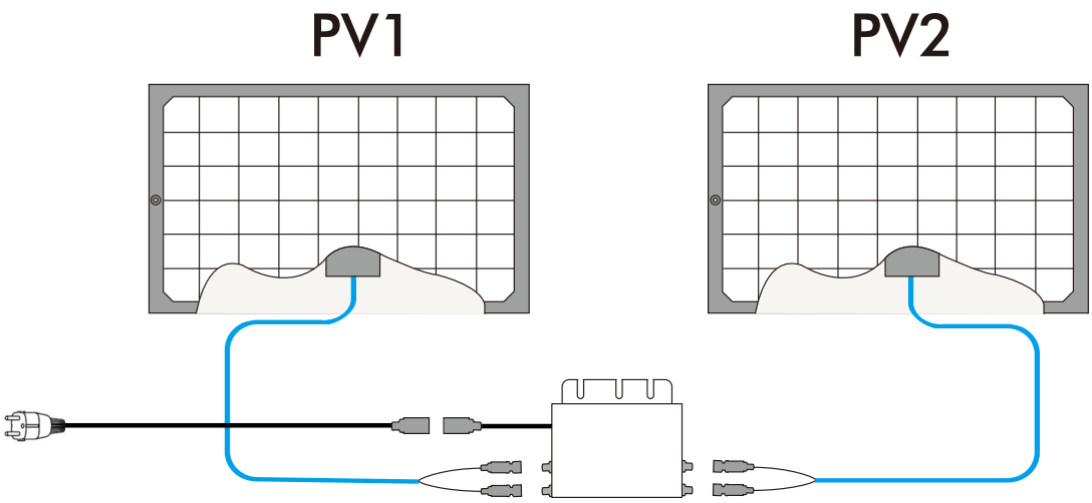

7.8 AC Connection

Insert one end of the AC plug into one of the AC connectors of the Micro Inverter and tighten it, then insert the other end of the AC plug into the socket in your home





After connecting the system, the Micro Inverter indicator light will flash red and enter the system startup. After about a few seconds, the startup indicator light will flash blue or remain on, accompanied by a red light flashing every 3 seconds.

NOTE:The illustrations are images for reference,your device may differ

8. Monitoring

8.1 Installation of the APP

8.1.1 Download App

According to the mobile phone operating system, find **SVAN** in the Android or Apple store, download the App, register a personal account and log in.

SVAN

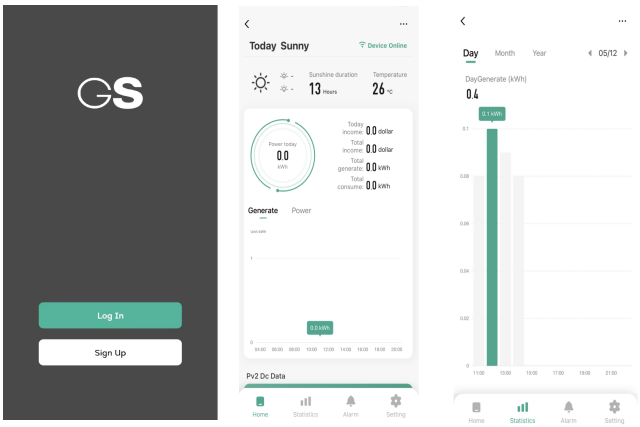

ONTDEK HET OP Google Play

Download on the App Store

8.1.2 Recofirm Micro Inverter Working

Ensure that the MicroInverter DC cable is connected and that the indicator light shows a green light that is constantly on or flashing, accompanied by a red light flashing every 3 seconds



NOTE:The illustrations are images for reference,your device may differ

8.1.3 Create Your Own Account

After logging in to **SVAN**, complete the following steps to create your account

Click "Sign Up" to get into the register page and choose location fill up your account ,then click the "Get your Vertification Code" and set your password.

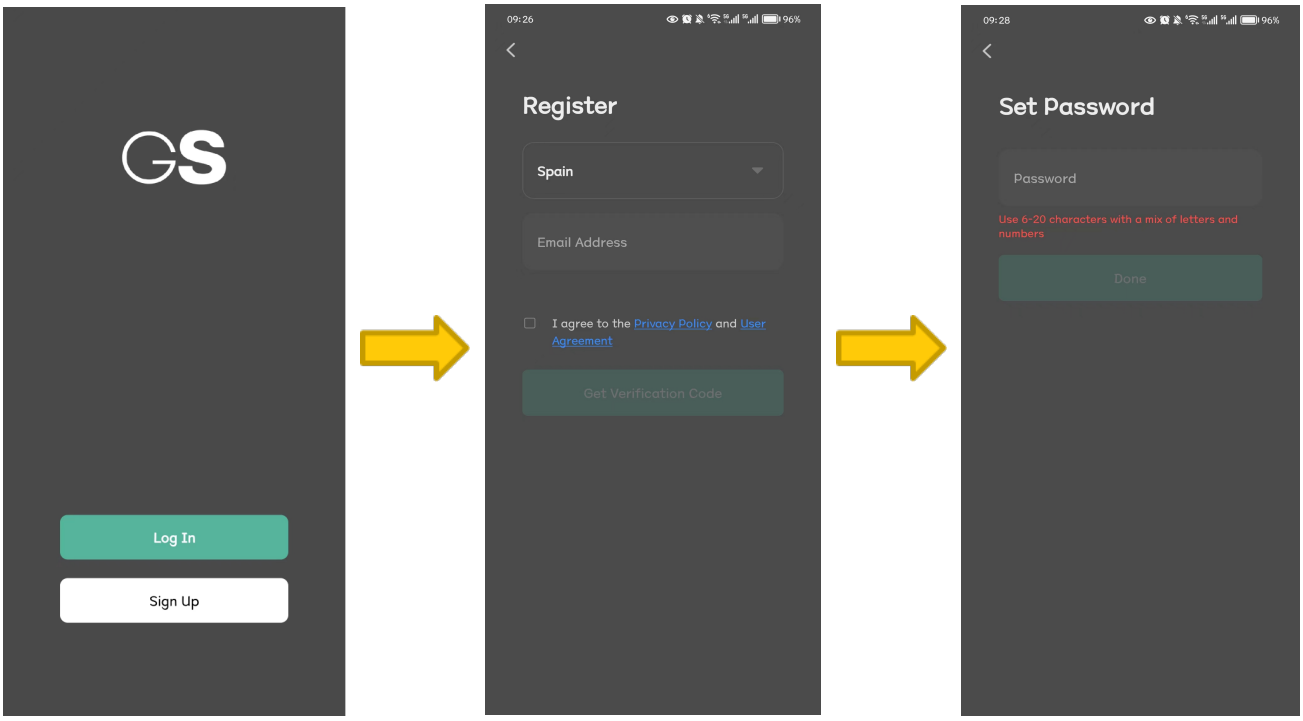

Agree to the following authorization requirements, then follow the steps and go to the APP to Add device

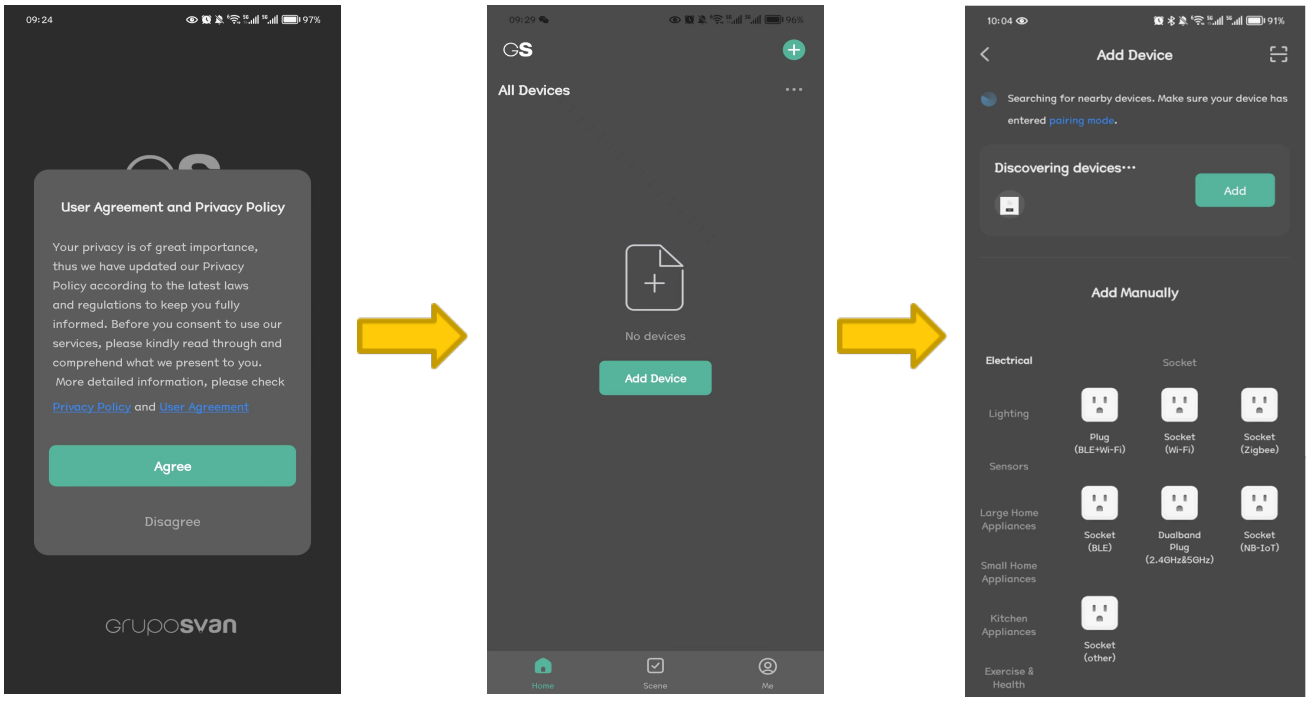

NOTE:The illustrations are images for reference, your device may differ

8.1.4 Complete the Addition of Your Device

Follow the steps to enter your home WIFI account and password, then click "Next", wait for the device to be added, and finally click "Done".

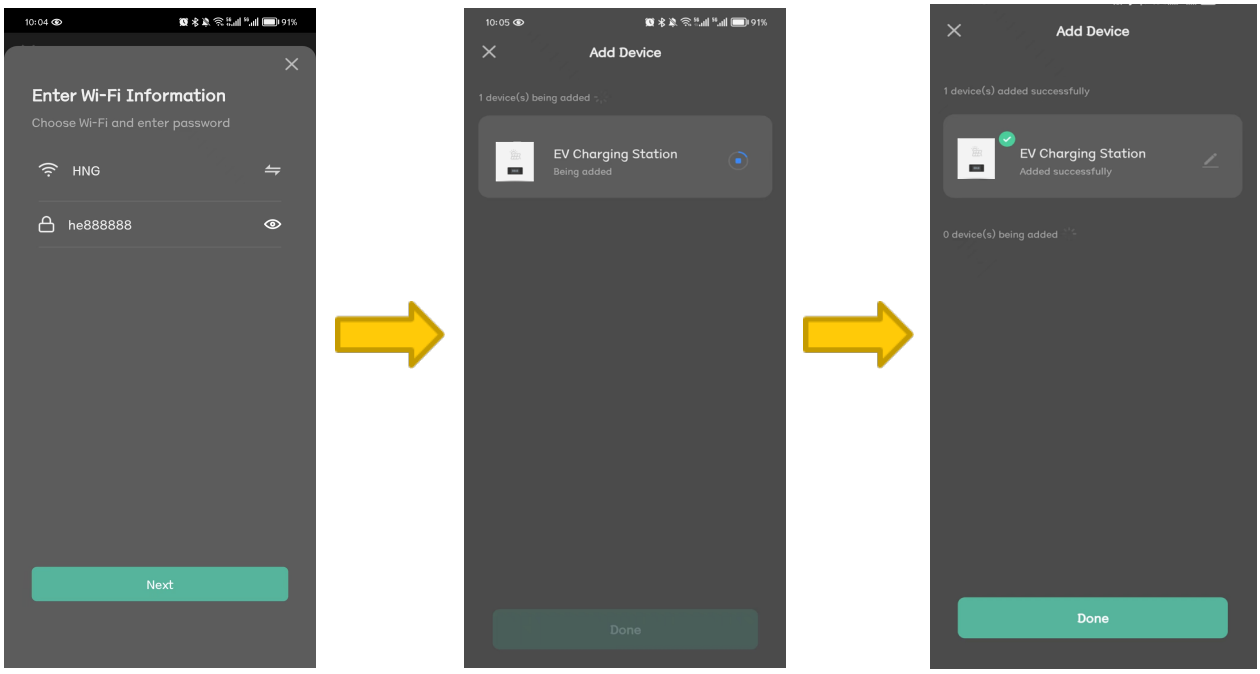

After completing all the steps, you will be able to check the operation information of your plant through the APP

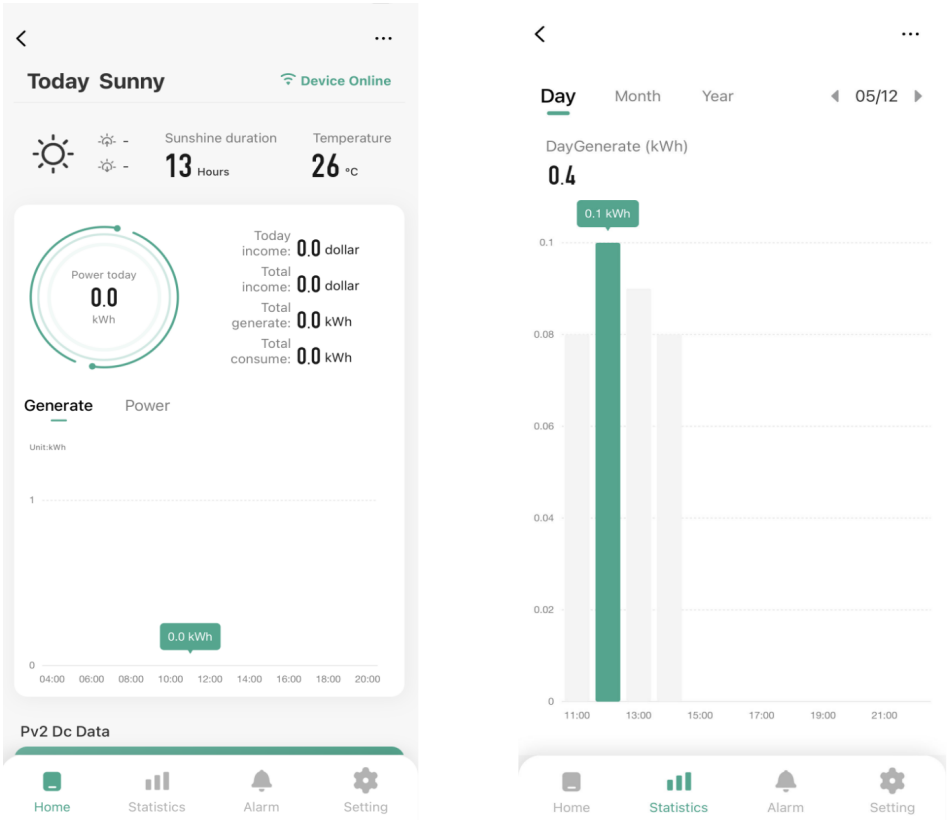

NOTE:The illustrations are images for reference,your device may differ

8.2 LED Indicator Working Status

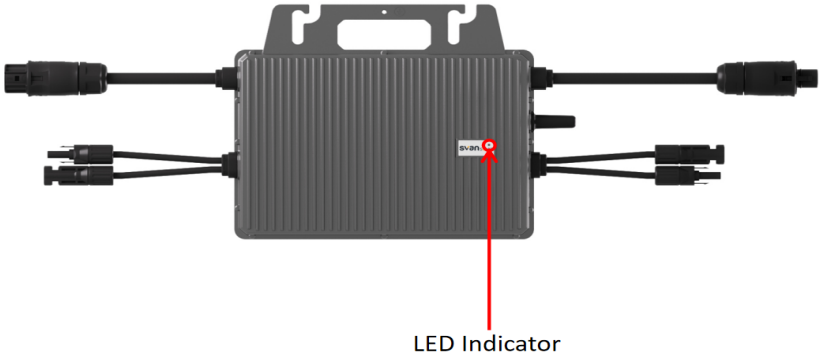

LED Status Tables	
Fault / Abnormal	**LED Status**
Safety Regulations Fault(GFDI), Hardwear Fault	Red light always on
DC Side Fault(All Ports)	Red light flashing(0.2S ON-0.8S OFF)
DC Side Fault(Partial Ports)	Green light flashing(0.2S ON-1.8S OFF)
Grid Missing	Red light flashing(0.2S ON-1.8S OFF)
Grid Fault	Red light flashing(0.2S ON-3.8S OFF)
Upgtading	Green light flashing(1S ON-1S OFF)
Network Abnormality, No Network	Green light always on
Network Configurating, AP Configures the network	Green light flashing alternately(0.2S ON-0.8S OFF)& (1S ON-1S OFF)
Network Configurating, EZ(BLE) configures Quickly	Green light flashing alternately 2*(0.2S ON-0.8S OFF) & 1*(1S ON-1S OFF)
Normal(Standby)	Green light flashing(0.2S ON-0.8S OFF)

NOTE:The illustrations are images for reference,your device may differ

9. Micro Inverter Technical Data

Reference	SSRSB04K	SSRSB08K
Input Data (DC)		
Recommended Module Power (W)	300~550	300~550
Mppt Voltage Range (V)	16~60	16~60
Start up Voltage(V)	22	
Max. Input Voltage (V)	60	
Max. Input Current (A)	14	
Max. Input Short Circuit Current (A)	20	
Output Data (AC)		
Max. Continous Output Power (W)	400	800
Nominal Output Current (A)	1.74	3.48
Max. Output Current (A)	2	4
Nominal Output Voltage (V)	220/230/240 (175-270),L/N/PE	
Nominal Frequency (Hz)	50/60	
Power Factor	>0.99 default, 0.8 leading ...0.8lagging	
Output Current Harmonic Distortion	<3%	
Maximum Units Per 20A Branch	9	5
Efficiency		
EU Efficiency	96.3%	96.3%
CEC Weighted Efficiency	96.5%	96.5%
Nominal Mppt Efficiency	99.9%	99.9%
Night Time Power Consumption(mW)	<50	
Mechanical Data		
Dimensions (W×H×D mm)	182 x 164 x 30	250 x 223x 30
Weight [kg]	2	3.1
Type of Enclosure	IP 67	
Cooling	Natural Convection	
Environmental Data		
Ambient Temperature Range	-40°C to 65°C	
Internal Temperature Range	-40°C to 85°C	
Relative Humidity	0-100 % condensing	
Max. Altitude Without Derating [m]	2000	
Monitor	Integrated WIFI(Optinal)	

10. Other Information



Dispose of packaging in an environmentally-friendly manner.
This appliance is labelled in accordance with European Directive 2012/19/EU concerning used electrical and electronic appliances (waste electrical and electronic equipment -WEEE). The guideline determines the frame work for the return and recycling of used appliances as applicablethroughout to the EU.

PACKAGE INFORMATION: Packaging materials of the product are manufactured from recyclable materials in accordance with our National Environment Regulations.Do not dispose of the packaging materials together with the domestic or other wastes. Take them to the packaging material collection points designated by the local authorities..

Warranty returns

Should you for any reason need to return this product for a warranty claim, make sure to include all accessories with the product.

SVAN TRADING S.L.
Imported by B73737553
Av. Altos Hornos S/N. Pto. Sagunto (46520). Valencia, España.)
info@svanelectro.com
960600034

For an electronic copy of this manual, please contact our after sales support centre.