**PROTECT YOUR WARRANTY**

Read this manual carefully and keep it for future reference




# Single Phase Hybrid Inverter

## User Manual

**Reference:** SSRSIH14K/SSRSIH14.6K/SSRSIH15K/SSRSIH16K

# Contents


03 **Important Safety Information**
06 **Introduction**
10 **Product Overview**
12 **Installation**
28 **Operation**
48 **Power ON/OFF**
49 **Wi-Fi Connection**
52 **Maintenance**
53 **Troubleshooting**
63 **Other Useful Information**

# Important Safety Information

## IMPORTANT SAFETY INSTRUCTIONS
## READ CAREFULLY AND KEEP FOR FUTURE REFERENCE

Read this manual thoroughly before first use, even if you are familiar with this type of product. The safety precautions enclosed herein reduce the risk of fire, electric shock and injury when correctly adhered to. Keep the manual in a safe place for future reference, along with the completed warranty card, purchase receipt and carton. If applicable, pass these instructions on to the next owner of the appliance.

**Always follow basic safety precautions and accident prevention measures when using an electrical appliance, including the following:**

**WARNING: Electric shock hazard - professional installation only!**

- This appliance must be professionally installed to an appropriately earthed wiring system by a licensed installer, following the instructions in this manual.
- Ensure to make these instructions available to the installer. Failure to install the appliance correctly could invalidate any warranty or liability claims.
- Alterations to the domestic wiring system must only be made by a qualified electrician. Failure to follow this advice may result in electric shock or death.

### General usage conditions and restrictions

- **Installation location and parameters:** The inverters are designed for indoor and outdoor installation (IP65). To increase the safety, performance and lifespan of the inverter, please select the mounting location carefully. The inverter should be installed on a solid surface, far from flammable or corrosion materials, where is suitable for inverter's weight and dimensions. The ambient temperature should be within -25°C ~ 60°C. The installation of inverter should be protected under shelter. Do not expose the inverter to direct sunlight, water, rain, snow, spray lightning, etc. The inverter should be installed vertically on the wall, or lean back on plane with a limited tilted angle. Leave the enough space around inverter, easy for accessing to the inverter, connection points and maintenance (see pages 12-13 for more information).
- **WARNING! This equipment is not suitable for use in locations where children are likely to be present.**
- **Intended purpose:** Only use this inverter for its intended purpose, in its intended environment and as described in this manual. Any other use may cause fire, electric shock or injury and may void the warranty,
- **Follow instructions:** Make sure to observe all rules and provisions in this manual. These instructions are not intended to cover every possible condition and situation. As with any product such as this, use common sense and caution when installing, operating and maintaining.

# Important Safety Information (Cont.)

## Electrical Safety

- **WARNING! High Voltage:** Any object - particularly a wet object - coming into contact with a high voltage power supply (directly or indirectly) can cause serious injury or death.
- **Tools:** When working with high voltage and AC power, be sure to only use the required, special-purpose tools.
- **Static electricity:** Any static electricity could damage veneer on the electrostatic sensitive components. Before touching the plug in, circuit board or chips, be sure to use correct electrostatic prevention measures.
- **WARNING! Power supply:** When installing or maintaining this inverter, the power supply must be disconnected first.
- **WARNING! Hazardous Voltage:** The inverter system operates with hazardous voltages. Installation, maintenance and repairs must ONLY be carried out by qualified personnel.
- **WARNING! Authorised personnel:** Only persons are adequately familiar with inverters and with the required precautionary measures may replace inverters and supervise operations. Unauthorized persons must be kept well away from the inverter.
- **WARNING! Metal items:** Inverters may cause electric shock and have a high short-circuit current. Please remove all wristwatches, rings and other metal personal objects before maintenance or repair, and only use tools with insulated grips and handles for maintaining or repairing.
- **WARNING!** An overcurrent and disconnection protection device must be installed between the battery and the inverter.
- **WARNING! Replacements:** When replacing the inverter, install the same number and same type of inverter.
- **WARNING! Do not open or destroy inverters.**
- **WARNING! Fuse:** Please replace the fuse only with the same type and amperage in order to avoid fire hazards.
- **WARNING! Disassembly:** Do not open or disassemble the inverter system.
- **WARNING! Disconnecting: Do not touch the inverter cover until at least 5 minutes after disconnecting both DC and AC power supply.**
- **WARNING! Enclosure: Do not touch the inverter enclosure when operating, keep away from materials that may be affected by high temperatures.**

# Important Safety Information (Cont.)

- **WARNING! Disposal:** Please ensure that the used device and any relevant accessories are disposed of in accordance with applicable regulations.
- **WARNING! Handle with care:** This inverter should be placed upwards and handled with care in delivery. Pay attention to waterproof requirements. Do not expose the inverter directly to water, rain, snow or spray.
- **WARNING! Modifications:** Alternative use or modifications to the inverter are not recommended. The warranty can become void if the inverter was tampered with or if the installation is not in accordance with the relevant installation instructions.
- **NOTE:** The product should not be installed in multiple phase combinations.
- **WARNING!** This appliance is intended for domestic use only !
- The product can be remotely monitored, please refer to the Web manual and App manual for more information.

# Introduction

## Inverter Introduction

These hybrid inverters are designed to increase energy independence for homeowners. Energy management is based on time-of-use and demand charge rate structures, which significantly reduces the amount of energy purchased from the public grid and optimize self-consumption.

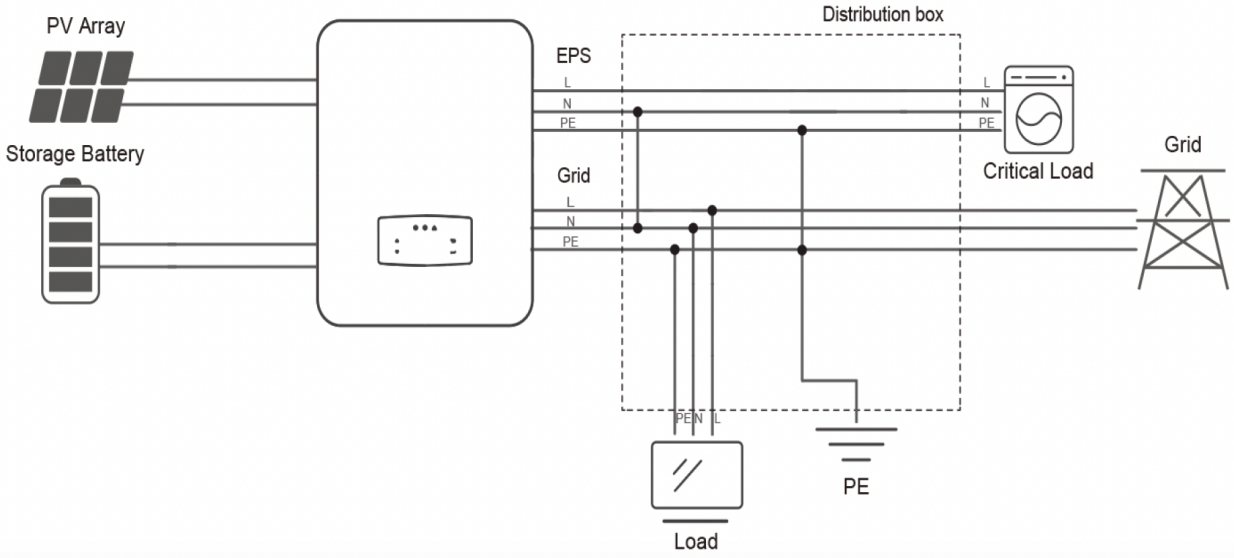


Note：The illustration is a reference image, your divice may differ.

## Operation Modes

### Self-Use Mode

The Self-Use mode is designed for areas with low feed-in tariff and high electricity prices. The energy produced by the PV system is used to optimize self-consumption needs. The excess energy is used to recharge the batteries, any remaining excess is then exported to the grid.

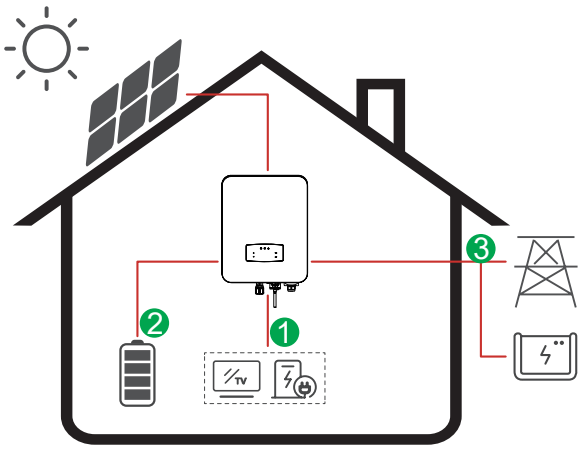


**Energy flow:**

PV → Load → Battery → Grid

Note：The illustration is a reference image, your divice may differ.

# Introduction (Cont.)

**Note: Advanced Settings**

- When you select 0 W under P_Feed menu, the inverter will export zero energy to the grid.
- When you select xx W under P_Feed menu, the inverter will export customized energy to the grid.

**Time of Use Mode**

The Time of Use mode is designed to reward customers who do their part to reduce demand on the electric grid, particularly during peak usage periods. This allows you to use most of your electricity from PV energy and during off-peak time periods, which could significantly lower your monthly bill.

**A) Charge Setting**

**PV Charge Mode**

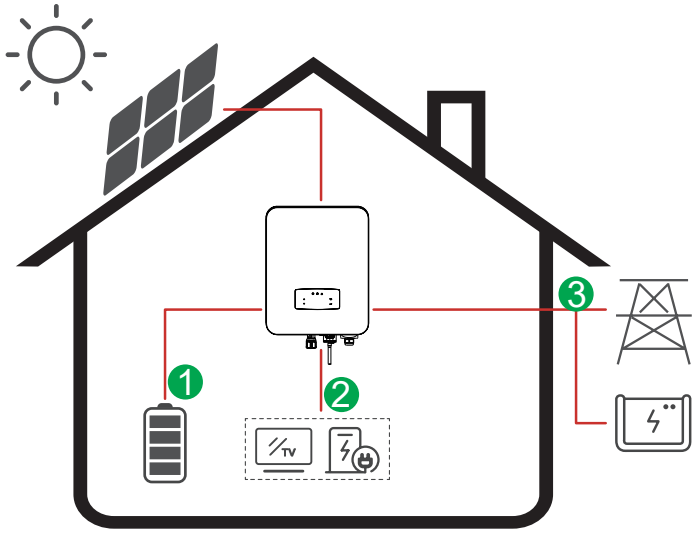


4 periods of time charge setting.

**Energy flow:**

PV → Battery → Load → Grid

Note：The illustration is a reference image, your divice may differ.

**AC Charge Mode**

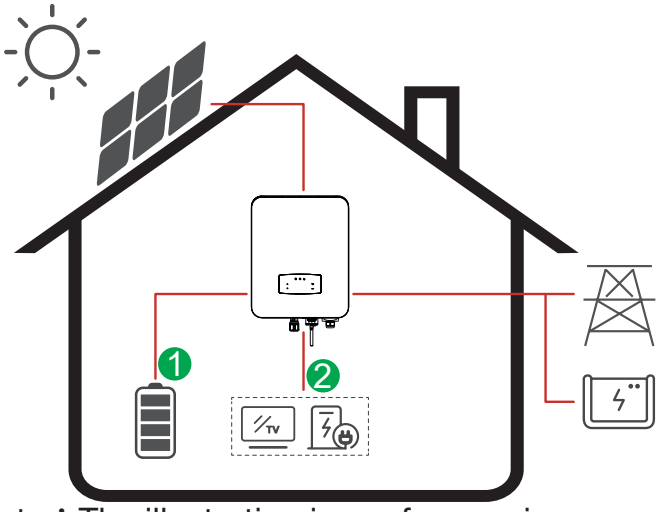


4 periods of time charge setting.

**Energy flow:**

PV and Grid → Battery → Load

**Note:** After selecting AC charge, when PV does not have sufficient power, AC will also charge the battery.

Note：The illustration is a reference image, your divice may differ.

# Introduction (Cont.)

### B) Discharge

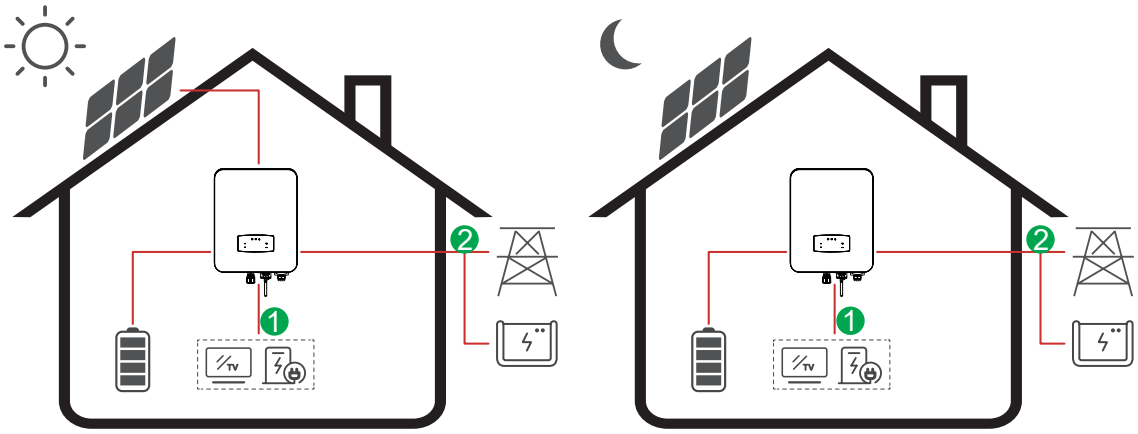


Note：The illustration is a reference image, your divice may differ.

**Energy flow:** Battery and PV → Load → Grid

### C) Forbidden Discharge

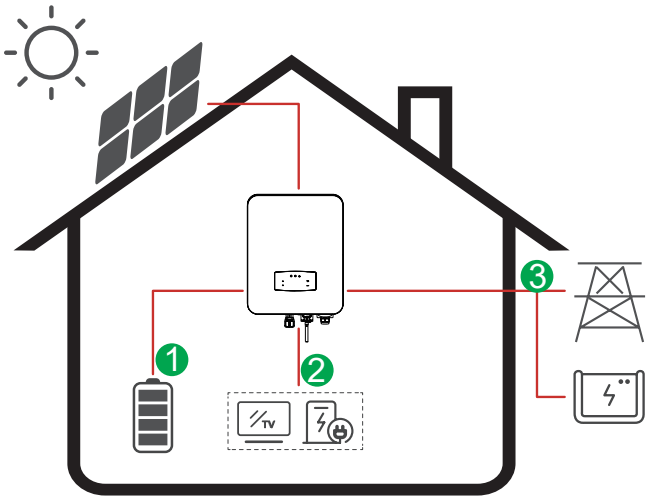


**Energy flow:**

PV → Battery → Load → Grid

Note：The illustration is a reference image, your divice may differ.

**Selling First**

The Selling First mode is suitable for regions with a high-feed-in tariff.

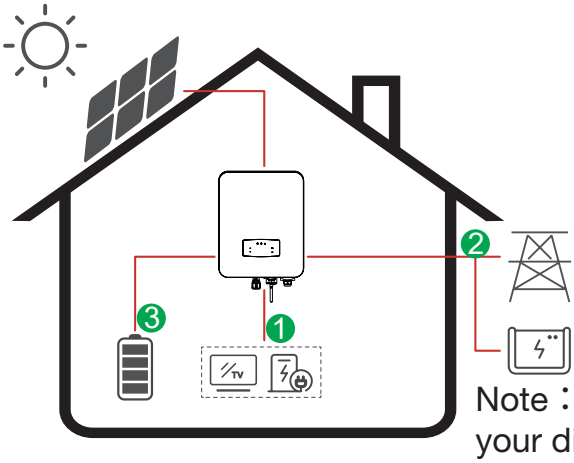


**Energy flow:**

PV → Load → Grid → Battery

Note：The illustration is a reference image, your divice may differ.

# Introduction (Cont.)

**Back-Up**

When the grid fails, the system will automatically switch to Back-Up mode. The back-up loads can be supplied by both PV and battery energy.

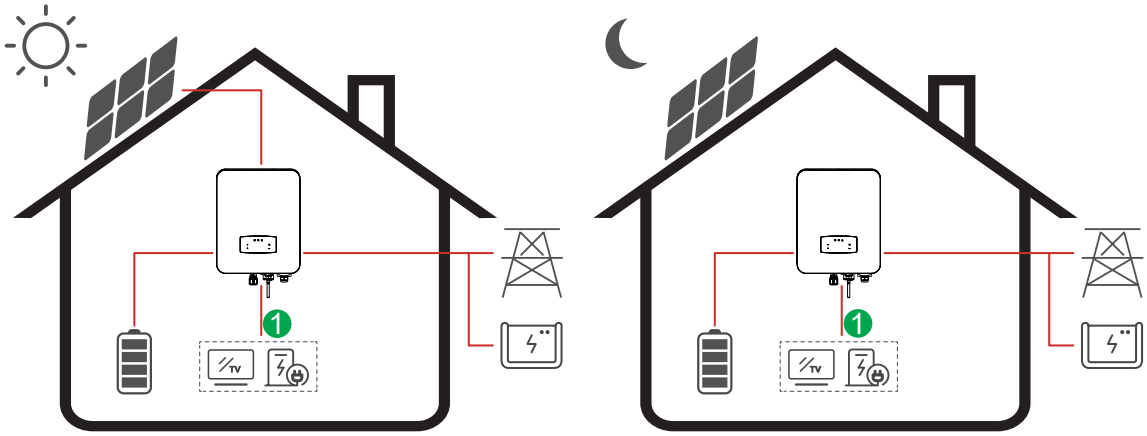

Note：The illustration is a reference image, your divice may differ.

**Energy flow:** PV and Battery → Load

# Product Overview

## Inverter Overview

### Unpacking

On receiving the inverter, please check to make sure the packing and all components are not missing or damaged. Please contact your dealer directly for support if there are any damage or missing components.

### Package List

When opening the package, please check that the contents are as shown below.

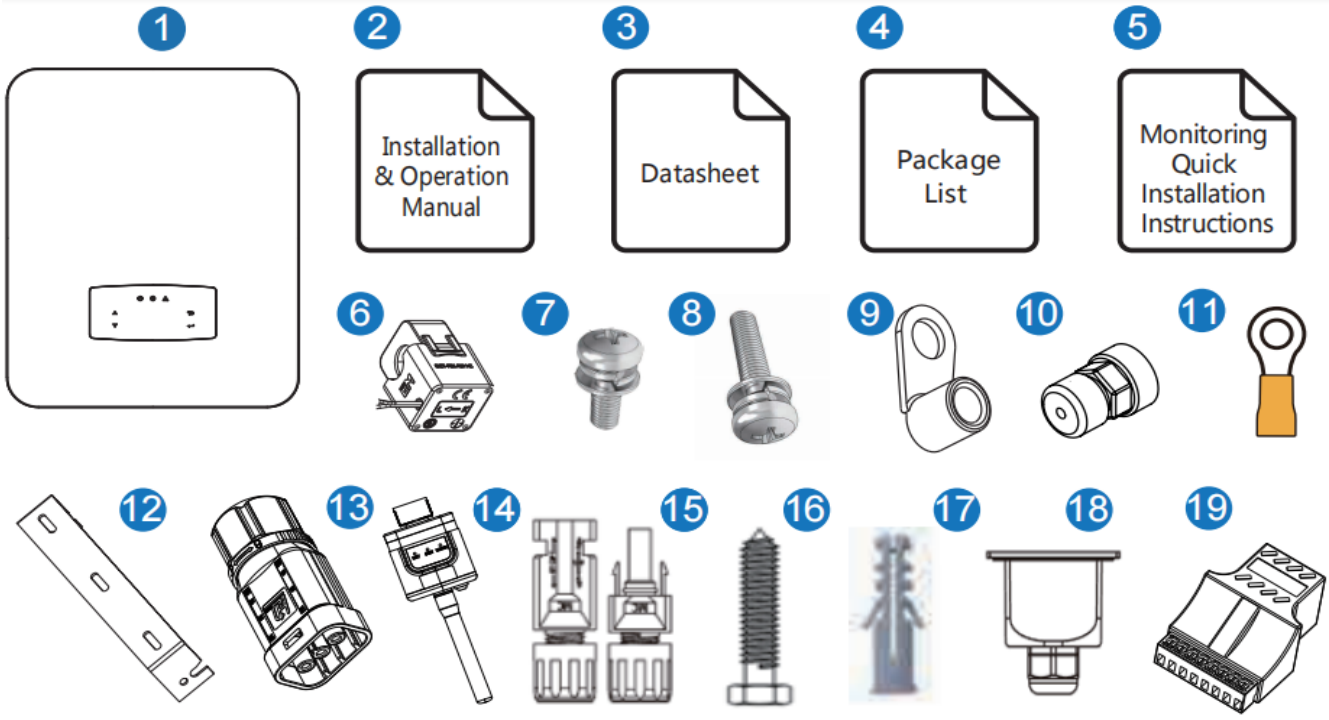


Note：The illustration is a reference image, your divice may differ.

| No. | Qty | Items | No. | Qty | Items |
|---|---|---|---|---|---|
| 1 | 1 | Hybrid Inverter | 11 | 1 | Grounding Terminal |
| 2 | 1 | Installation & Operation Manual | 12 | 1 | Wall Mounting Bracket |
| 3 | 1 | Datasheet | 13 | 1 | Battery Connector |
| 4 | 1 | Package List | 14 | 1 | WIFI Module |
| 5 | 1 | Monitoring Quick Installation | 15 | 1 | MC4 Connector |
| 6 | 1 | CT | 16 | 3 | Mounting Bracket Screw |
| 7 | 4 | AC Wiring Cover Screw | 17 | 3 | Expansion Tube |
| 8 | 1 | Security Screw | 18 | 1 | AC Waterproof Cover |
| 9 | 4 | AC Wiring Terminal | 19 | 1 | Communication Adapter |
| 10 | 2 | Connector | | | |

# Product Overview (Cont.)

## Product Overview

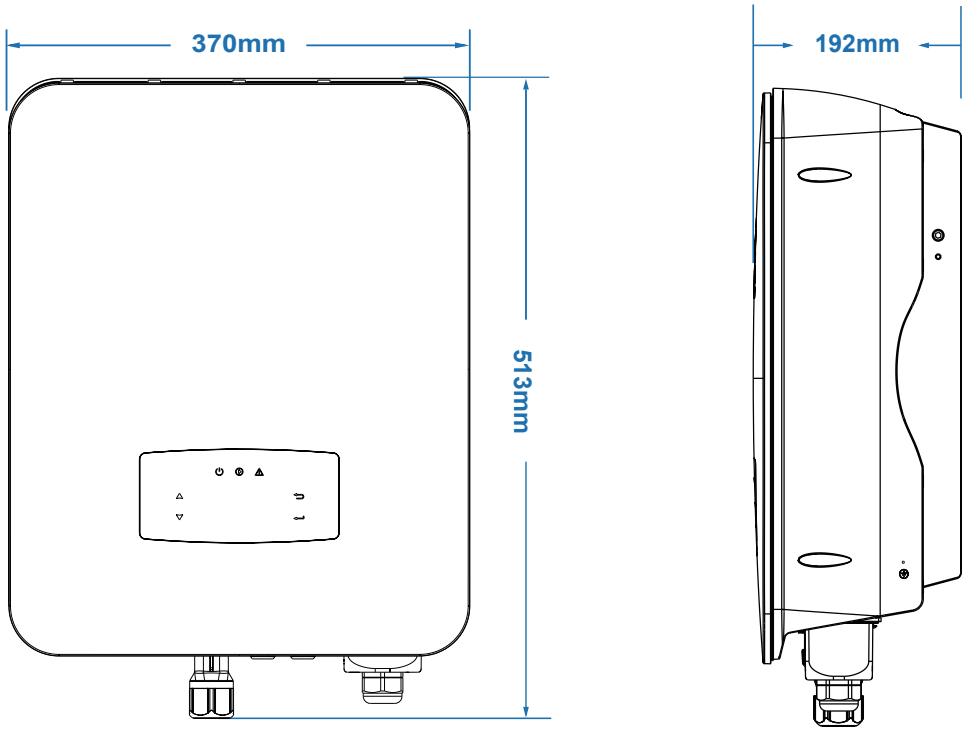


Note：The illustration is a reference image, your divice may differ.

## Inverter Terminals

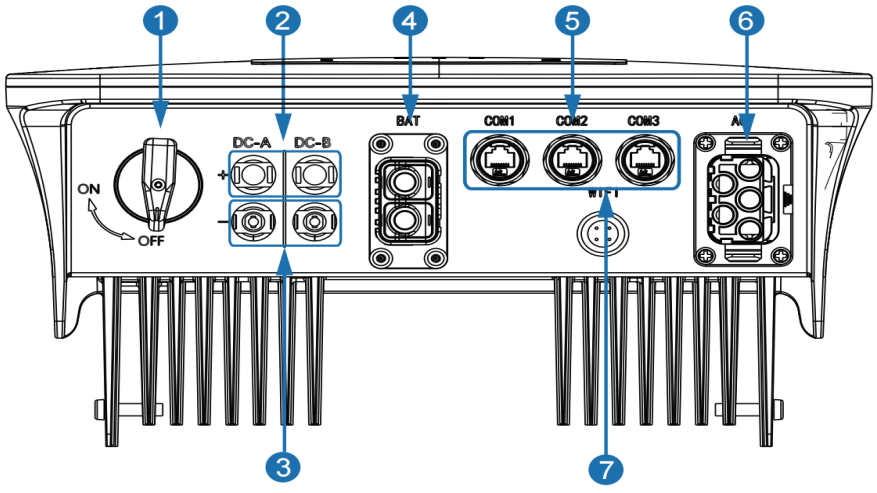


| No. | Items | No. | Items |
|---|---|---|---|
| 1 | DC Switch | 5 | Communication Port |
| 2 | DC Connectors ( + ) For PV Strings | 6 | AC Port & EPS Port |
| 3 | DC Connectors ( − ) For PV Strings | 7 | Monitor Module Port |
| 4 | Battery Port | | |

Note：The illustration is a reference image, your divice may differ.

# Installation

## Installation Location

The inverters are designed for indoor and outdoor installation (IP65). To increase the safety, performance and lifespan of the inverter, please select the mounting location carefully based on the following rules:

• The inverter should be installed on a solid surface, far from flammable or corrsive materials, that is suitable for the inverter's weight and dimensions.

• The ambient temperature should be within -25°C ~ 60°C.

• The installation of inverter should be protected and sheltered. Do not expose the inverter to direct sunlight, water, rain, snow, spray lightning, etc.

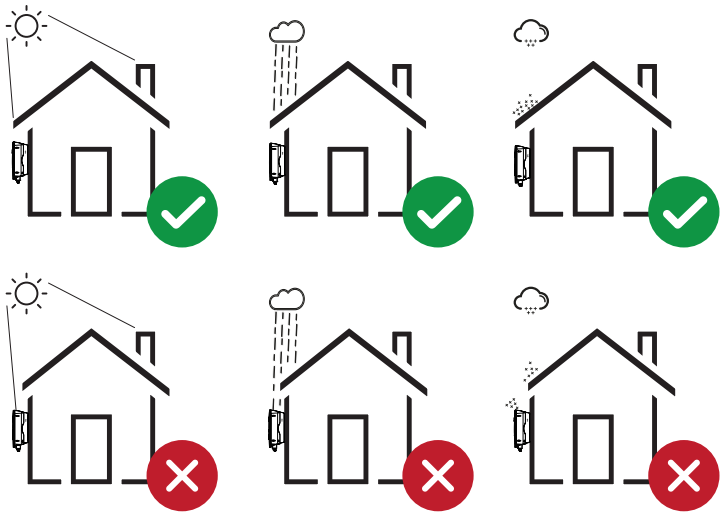

Note：The illustration is a reference image, your divice may differ.

The inverter should be installed vertically on the wall, or lean back on a plane with a limited tilted angle. Please refer to the below picture.

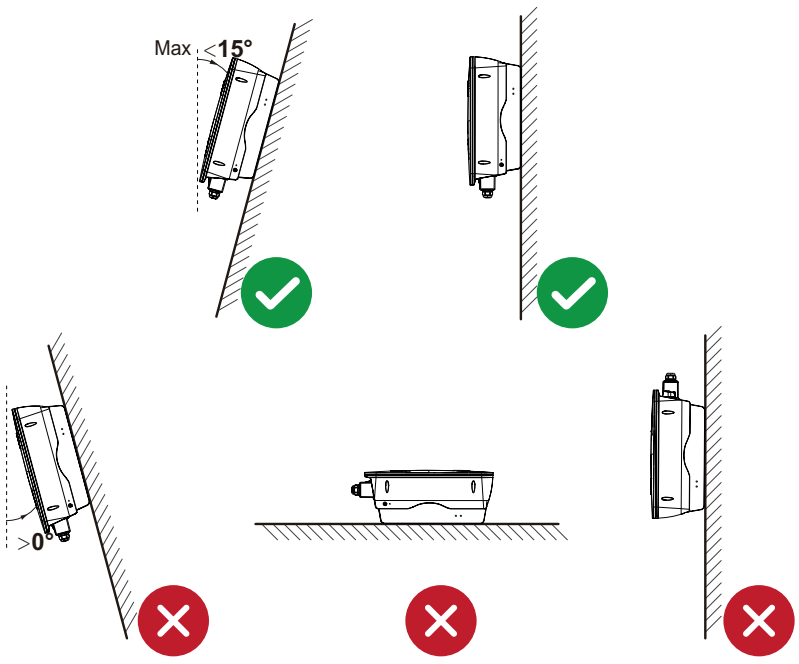


Note：The illustration is a reference image, your divice may differ.

# Installation (Cont.)

Leave the enough space around the inverter to allow for easy for access to the inverter and its connection points for maintenance.

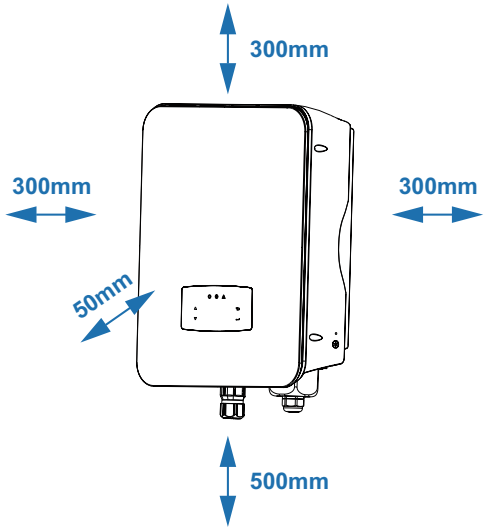


Note：The illustration is a reference image, your divice may differ.

**Mounting**

**Step 1:**

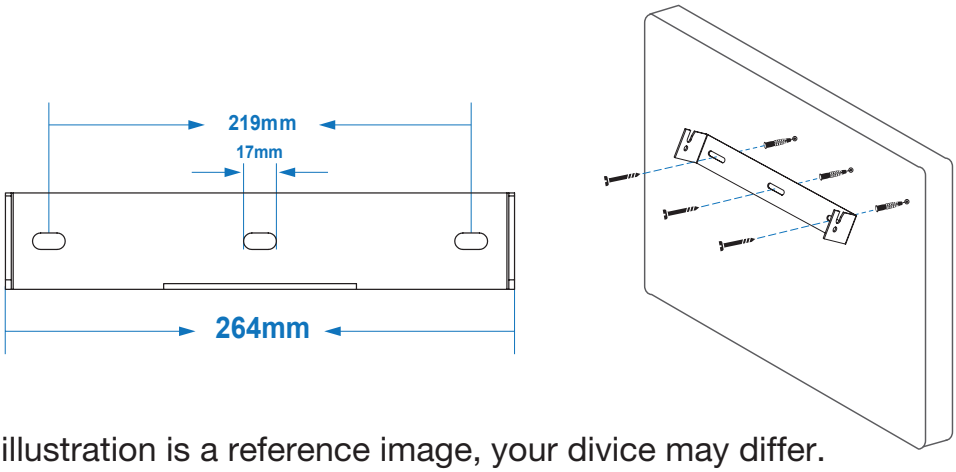


Note：The illustration is a reference image, your divice may differ.

**Step 2:**

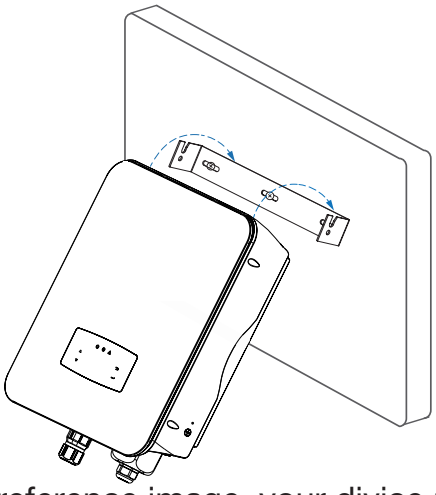

Note：The illustration is a reference image, your divice may differ.

# Installation (Cont.)

**Step 3:**

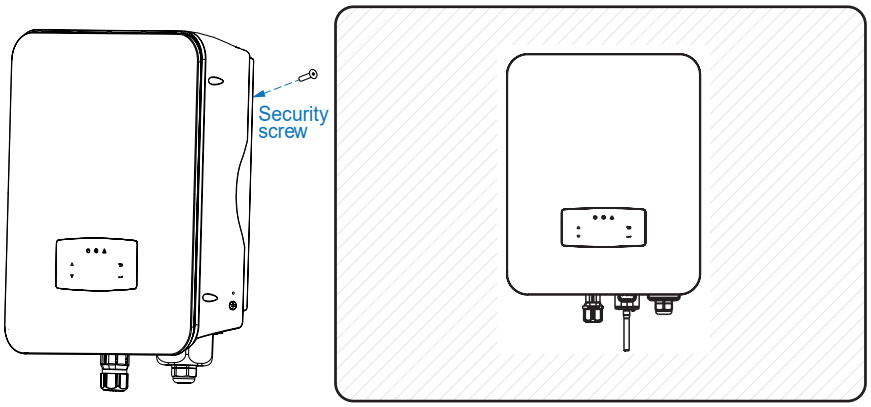


Note：The illustration is a reference image, your divice may differ.

# Installation (Cont.)

## Electrical Connection

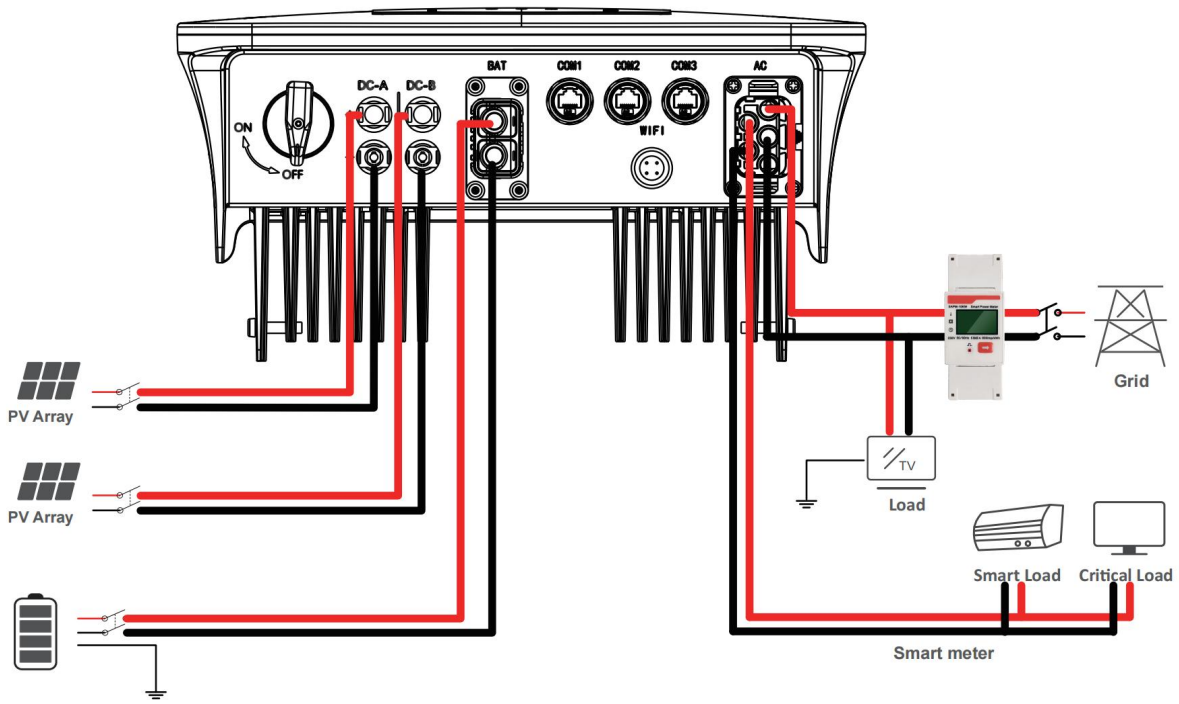


Note：The illustration is a reference image, your divice may differ.

### Communication Adapter pin assignment

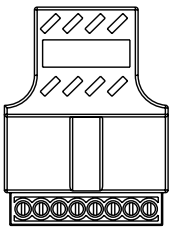


| No. | COM1 | COM2 |
|---|---|---|
| 1 | NTC+ | Meter 485A |
| 2 | NTC- | Meter 485B |
| 3 | Dry Contact | BAT 485A |
| 4 | Dry Contact | BAT CANH |
| 5 | DRM | BAT CANL |
| 6 | DRM | BAT 485B |
| 7 | 485A | CTU |
| 8 | 485B | CTN |

**Note:**

- For diesel generators or multi-machine parallel use, please contact the manufacturer, and provide installation and operation instructions separately.

# Installation (Cont.)

## PV Connection

This series of hybrid inverter has one/two MPPT channels, can be connected with one/two strings of PV panels. Please make sure below requirements are followed before connecting PV panels and strings to the inverter:

- The open-circuits voltage and short-circuit current of PV string should not exceed the reasonable range of inverters.
- The isolation resistance between PV string and ground should exceed 300 kΩ.
- The polarity of PV strings are correct.
- Use the DC plugs in the accessory.
- The lightning protector should be equipped between PV string and inverter.
- Disconnect all of the PV (DC) switches during wiring.

**WARNING!**

The DC voltage may be fatally high - please comply with electrical safety warnings when connecting. Please make sure the correct polarity of the cable is connected with inverter, otherwise the inverter could be damaged.

**Step 1:**

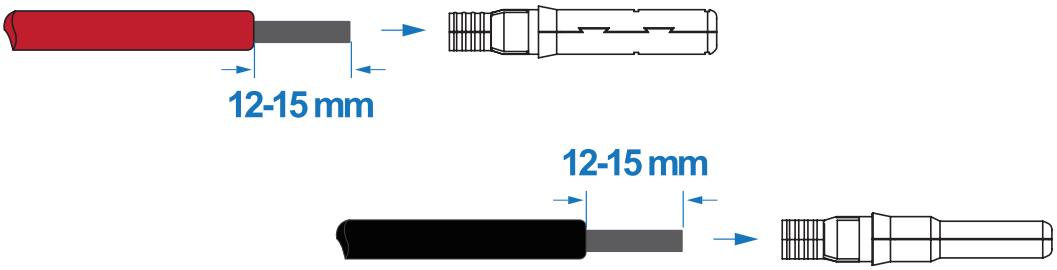


Note：The illustration is a reference image, your divice may differ.

Note: PV cable suggestion for cross section is 4 $mm^2$.

**Step 2:**

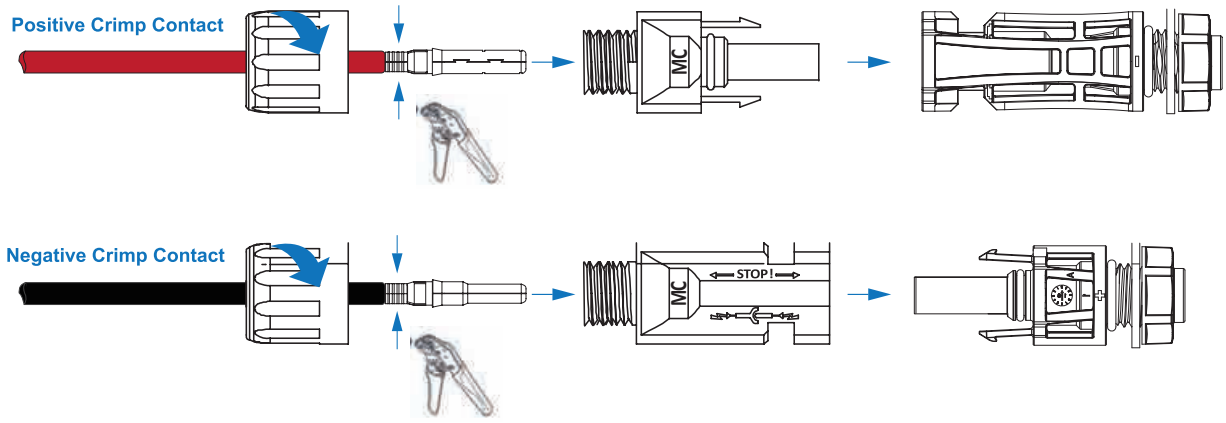


Note：The illustration is a reference image, your divice may differ.

**Note:** Please use PV connector crimper to pinch the point of the arrow.

**Note:** You'll hear a click sound when the connector assembly is correct.

# Installation (Cont.)

**Step 3:**

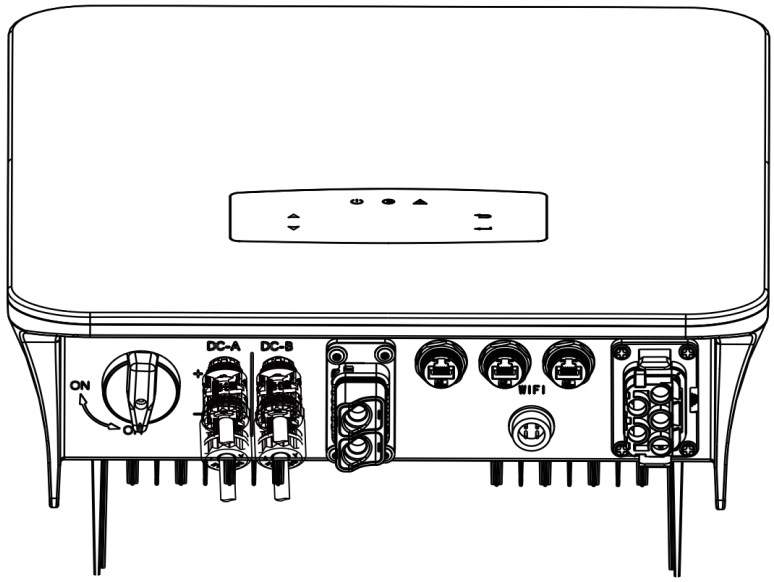


Note：The illustration is a reference image, your divice may differ.

## Battery Connection

These hybrid inverters are compatible with a lithium battery. For a lead acid battery or batteries from other brands, please contact Svan Trading for technical support.

**Note:** BMS (Battery Management System) communication is needed between inverter and battery.

**Step 1:**

Rotate counterclockwise and remove mounting bracket screw nut.

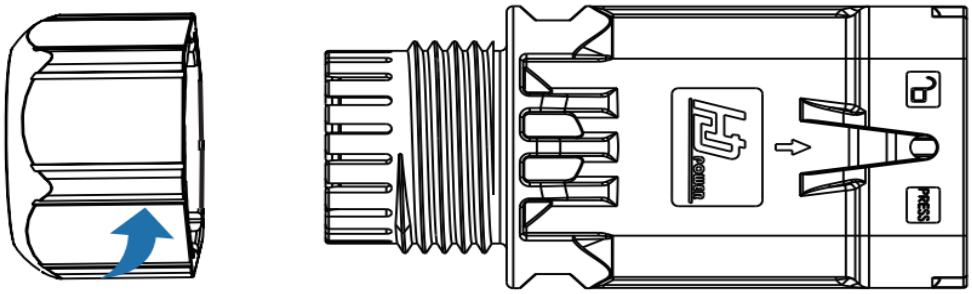


Note：The illustration is a reference image, your divice may differ.

**Note:** Battery cable suggestion Cross - section 4 AWG. Please make sure the battery polarities are correct.

# Installation (Cont.)

**Step 2:**
Pass the battery wire with the correct polarity through the nut and installation bracket.

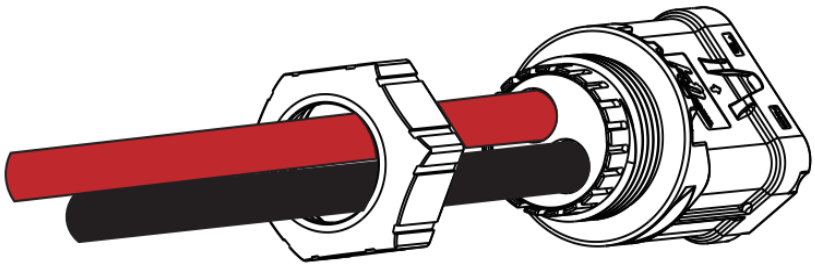

Note：The illustration is a reference image, your divice may differ.

**Step 3:**
Insert the battery wire into the corresponding terminal and lock it with a hexagon wrench.

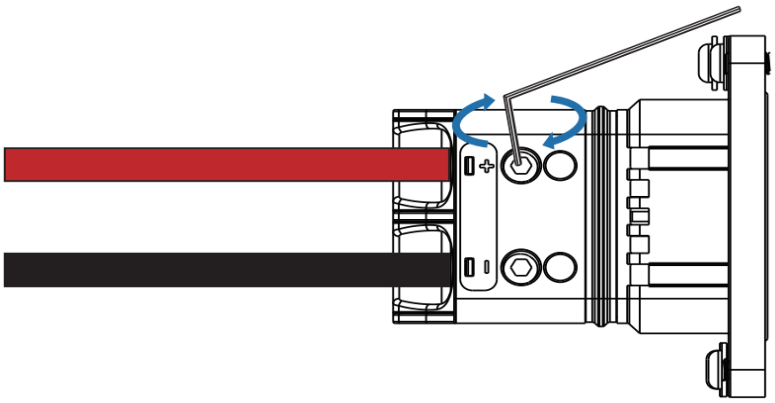

Note：The illustration is a reference image, your divice may differ.

**Note:**
Set battery type and manufacturer, please refer to BMS(Battery Management System)communication is needed between inverter and battery.

# Installation (Cont.)

**Step 4:**

Insert the battery connector into the inverter, if hear a “click”, it means the battery connection is finished.

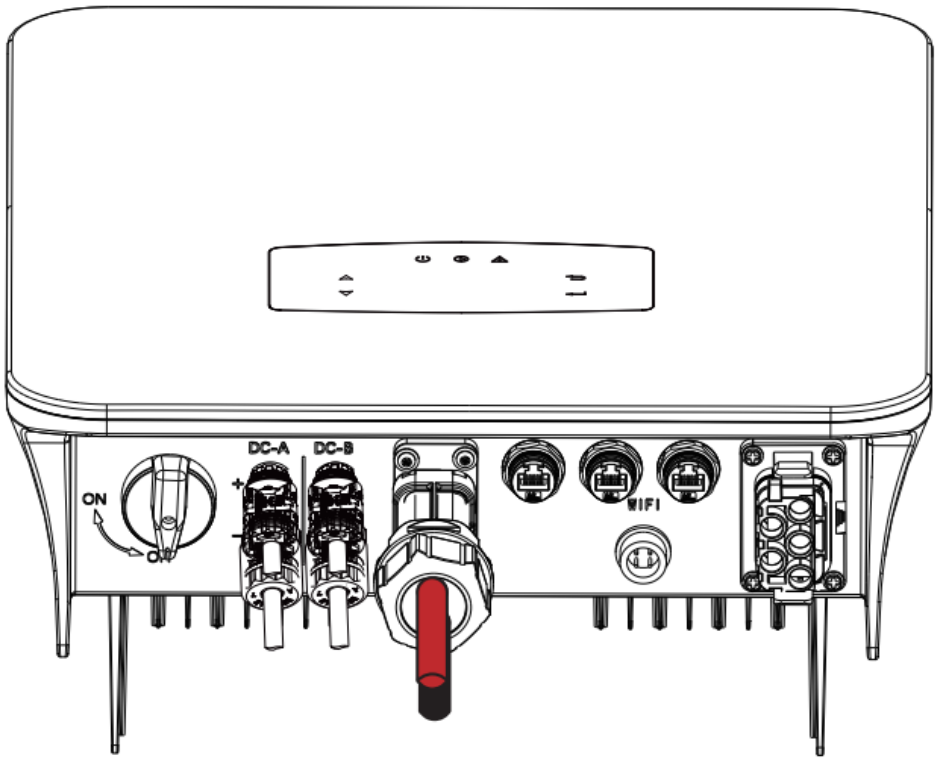


Note：The illustration is a reference image, your divice may differ.

# Installation (Cont.)

## Lithium Battery Communication Connection

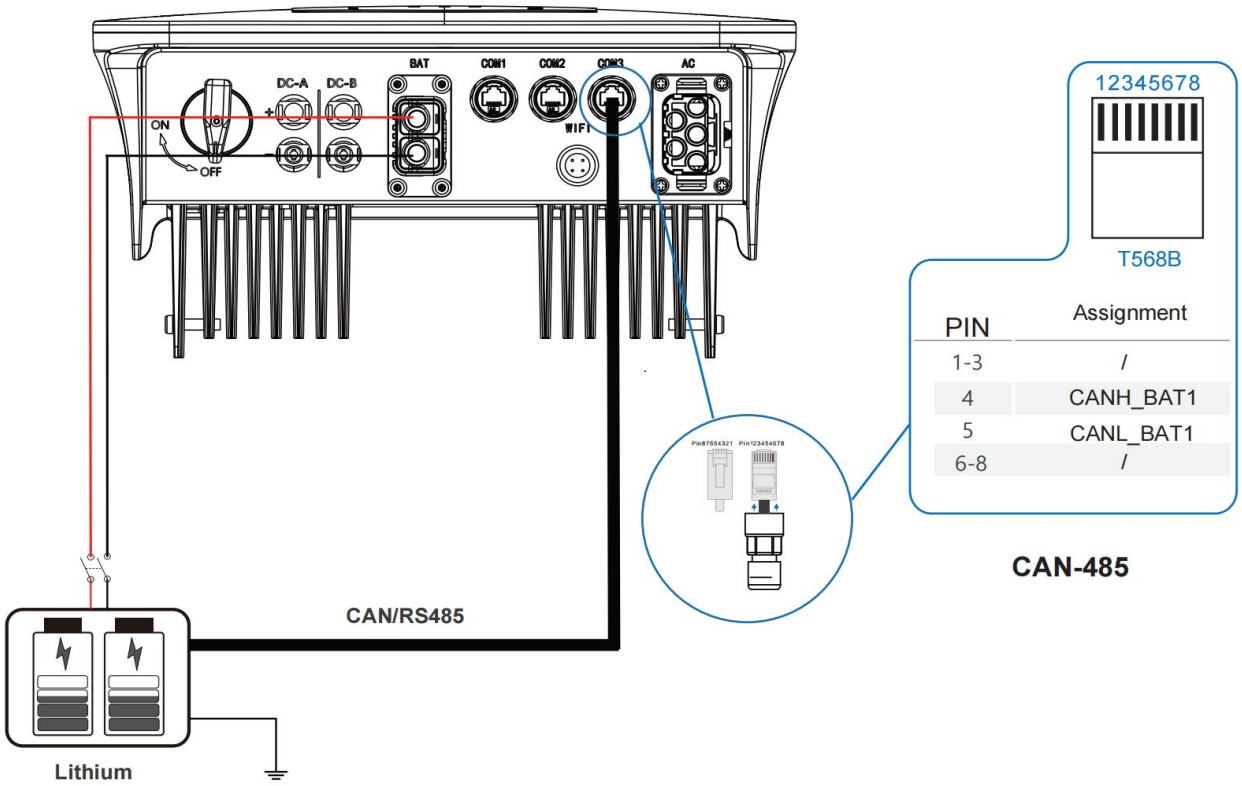


Note：The illustration is a reference image, your divice may differ.

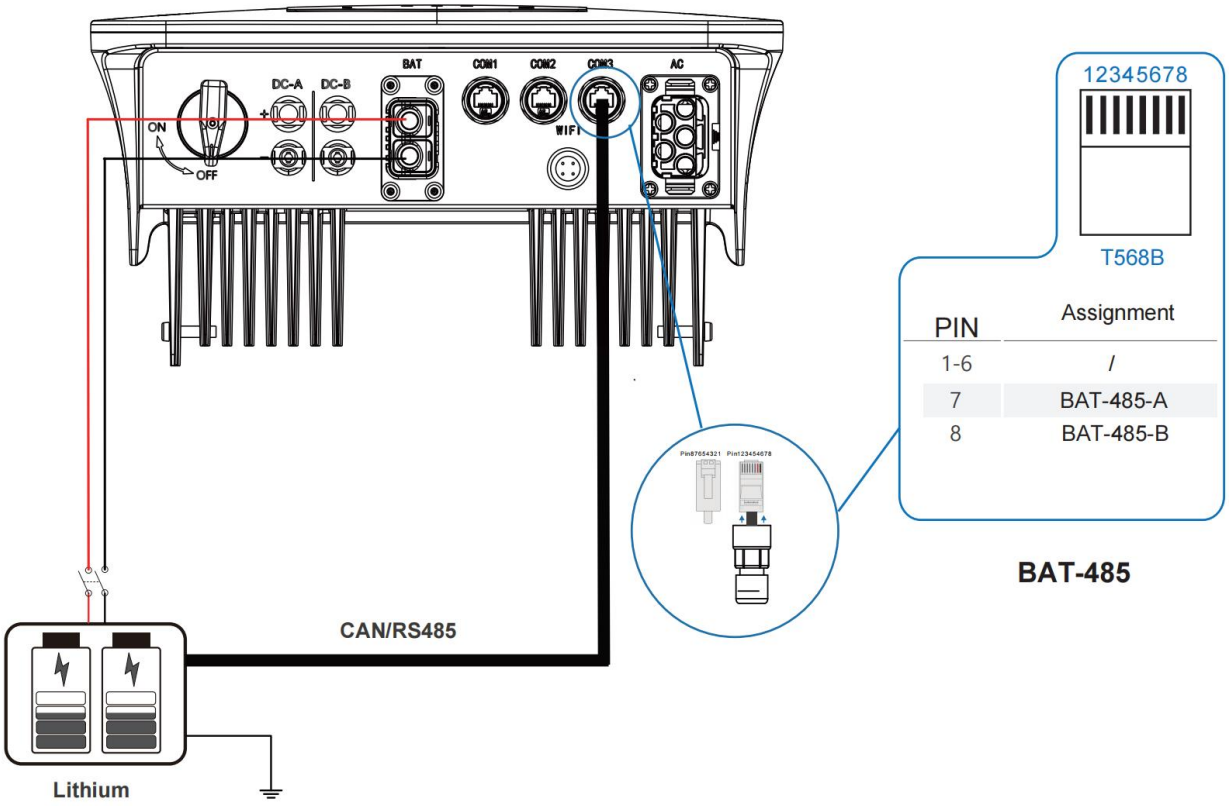


Note：The illustration is a reference image, your divice may differ.

# Installation (Cont.)

## Multi-Inverter Panel

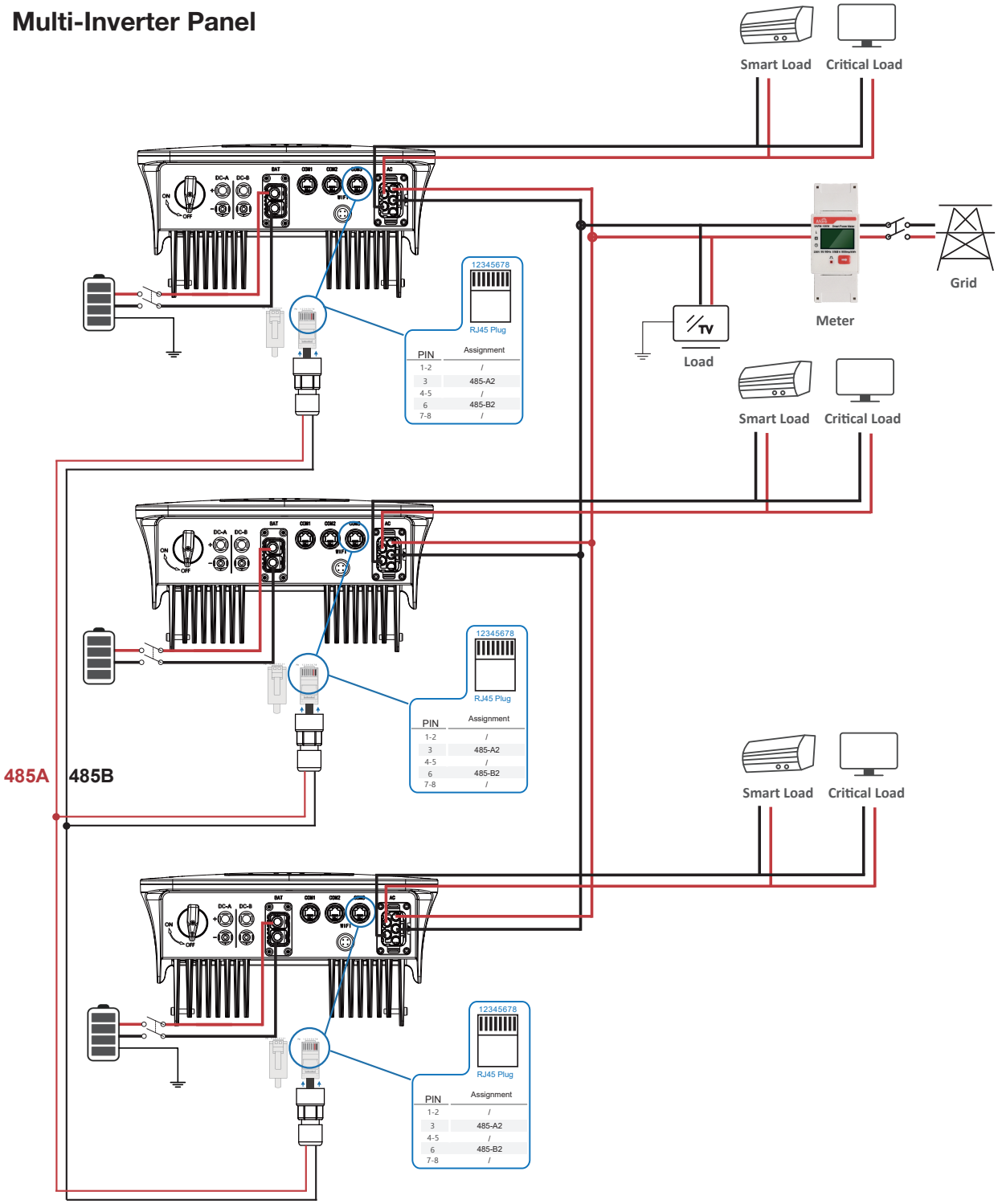


Note：The illustration is a reference image, your divice may differ.

# Installation (Cont.)

The AC terminal contains “GRID” and “EPS”, GRID for load, and EPS for emergency load.

Before connecting, a separate AC breaker between individual inverter and AC input power is necessary. This will ensure the inverter be securely disconnected during maintenance and fully protected from current of AC input.

An extra AC breaker is needed for On-Grid connection to be isolated from grid when necessary. Below are requirements for the On-Grid AC-breaker.

| Inverter Model | AC breaker specification |
|---|---|
| AF4-6K-SLP | 63A/200V/230V AC breaker |

**Note:**
Qualified electrician will be required for the wiring.

| Model | Wire Size | Cable（mm²） | Torque value |
|---|---|---|---|
| 4-6kW | 8-10AWG | 4-6 | 1.2N·m |

**Please follow steps for AC connection**

• Connect breaker first before connecting.

• emove insulation sleeve 11mm(0.5 inch) length, unscrew the bolts, insert the AC input wires according to polarities indicated on the terminal block and tighten the terminal screws.

**Step 1:**

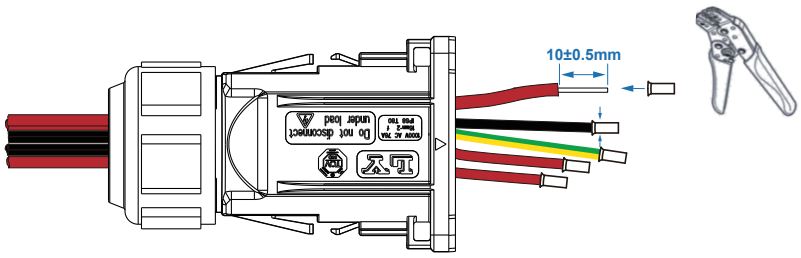


Note：The illustration is a reference image, your divice may differ.

# Installation (Cont.)

**Note:**
The wiring terminals should be wrapped with insulation tape, otherwise it will cause a short circuit and damage the inverter.

**Note:**
The Max. power load connects to EPS port should not exceed the inverter's EPS Max. output power range.

Step 2

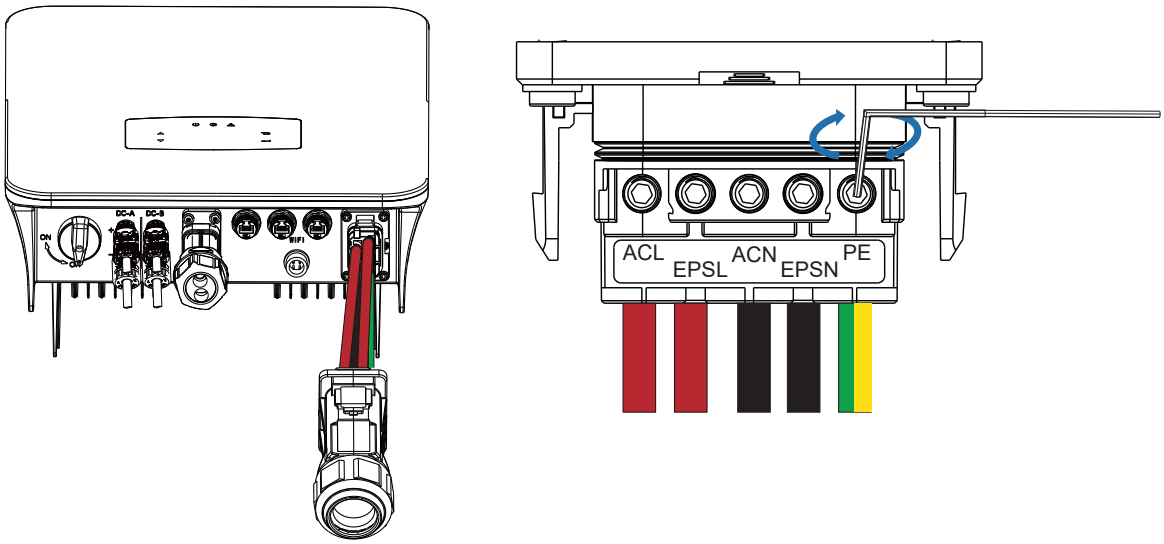


Note：The illustration is a reference image, your divice may differ.

Step 3

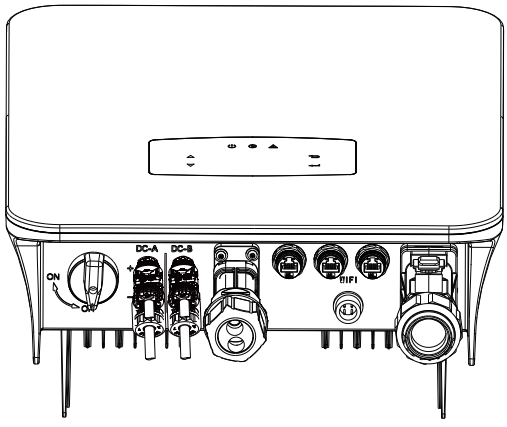

Note：The illustration is a reference image, your divice may differ.

# Installation (Cont.)

## DRM

The inverter provides a terminal block for connecting to a demand response enabling device (DRED). The DRED asserts demand response modes (DRMs). The inverter detects and initiates a response to all supported demand response commands within 2s.
The inverter only supports DRM0 : The inverter is in the state of “Turn off”.

Note：The illustration is a reference image, your divice may differ.

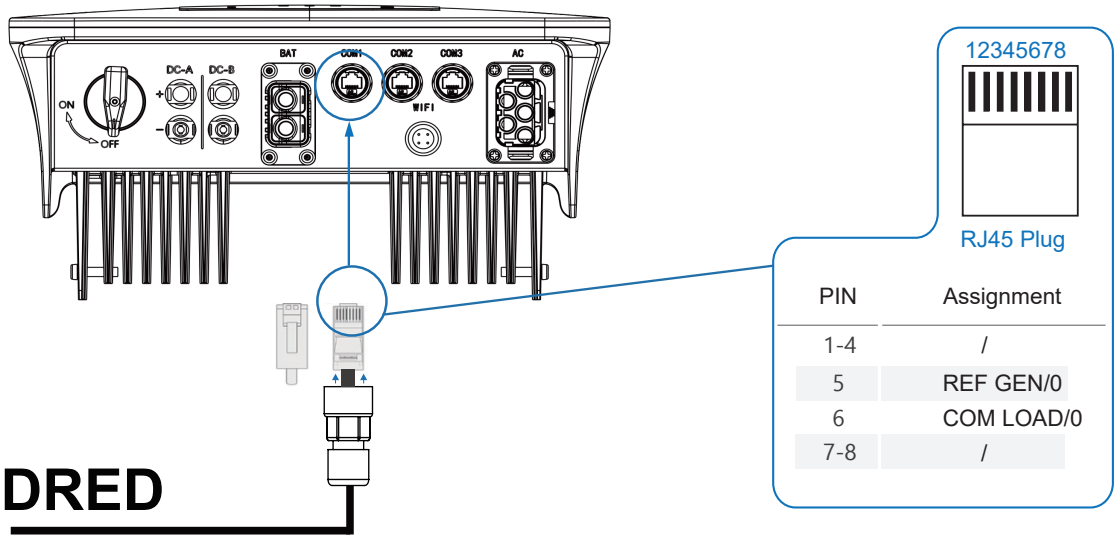


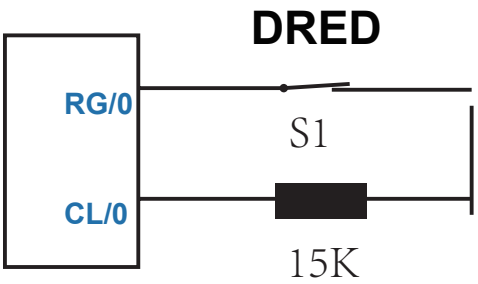


**Note:**
When DRM0 is enabled, switch S1i s opened.

## CT or Meter Connection

Meter and a current sensor (CT for short below) are used to detect current power direction of the local load and the grid. The output control function of the inverters will be activated based on the detected data.

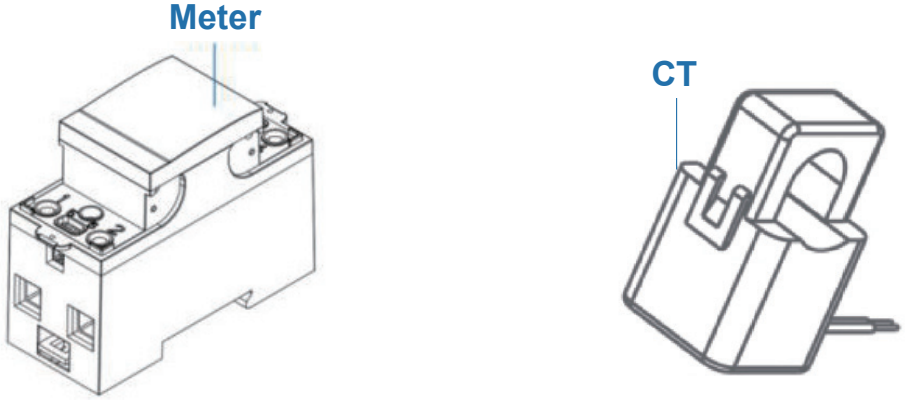


Note：The illustration is a reference image, your divice may differ.

# Installation (Cont.)

## Install the CT

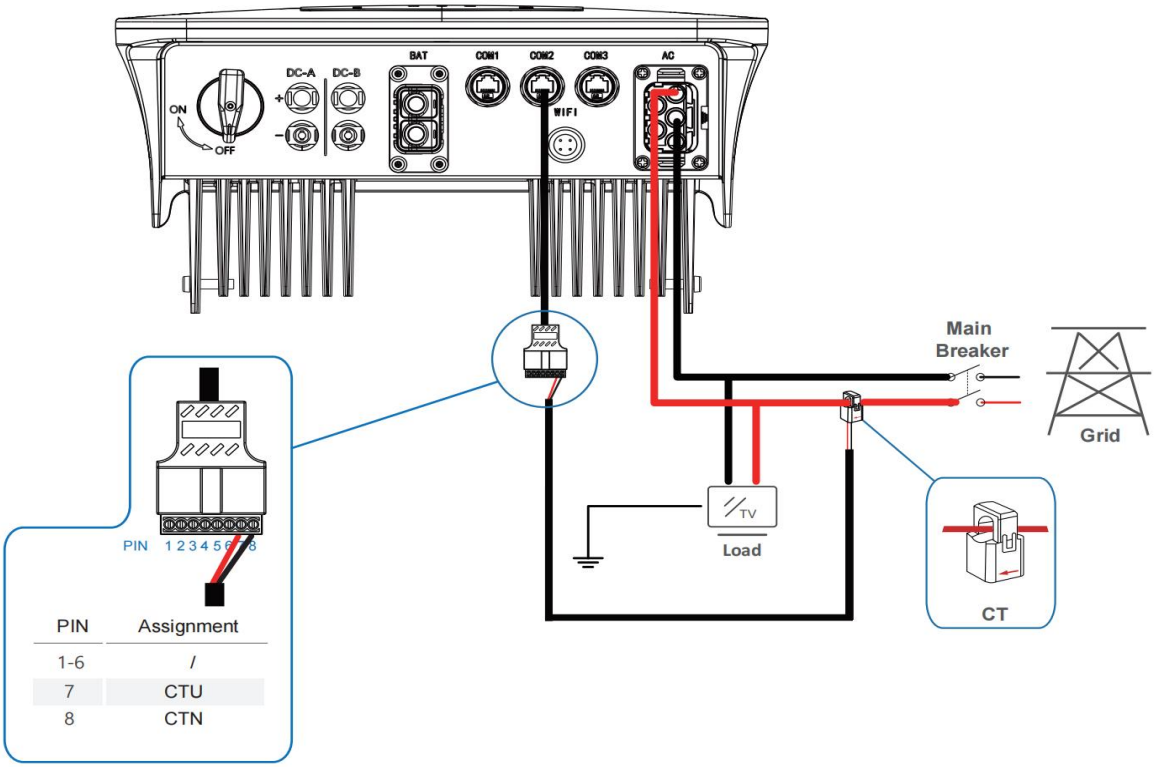


CT1 Note：The illustration is a reference image, your divice may differ.

## Install the Meter

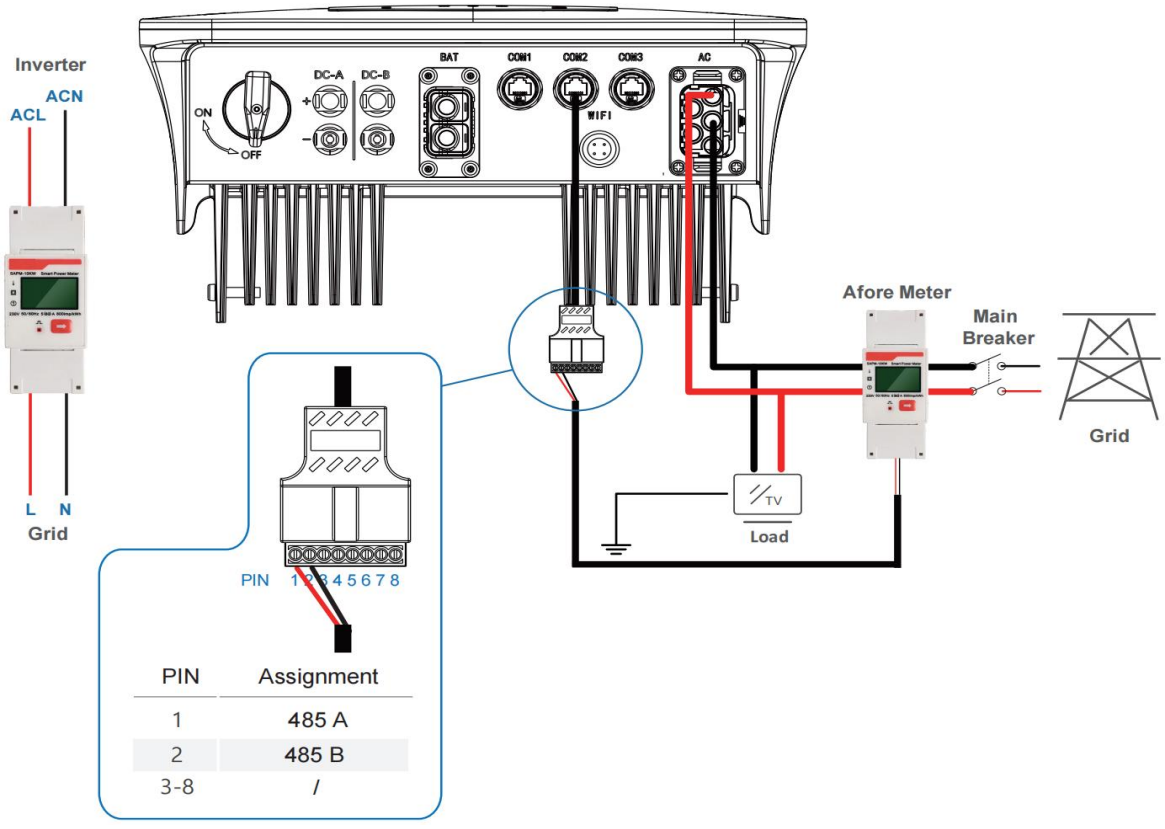


Note：The illustration is a reference image, your divice may differ.

# Installation (Cont.)

## Communication Connection

The monitoring module could transmit the data to the cloud server, and display the data on the PC, tablet and smart-phone.

**Install the WIFI / Ethernet / GPRS / RS485 Communication**

WIFI / Ethernet / GPRS / RS485 communication is applicable to the inverter.

**Step 1:**

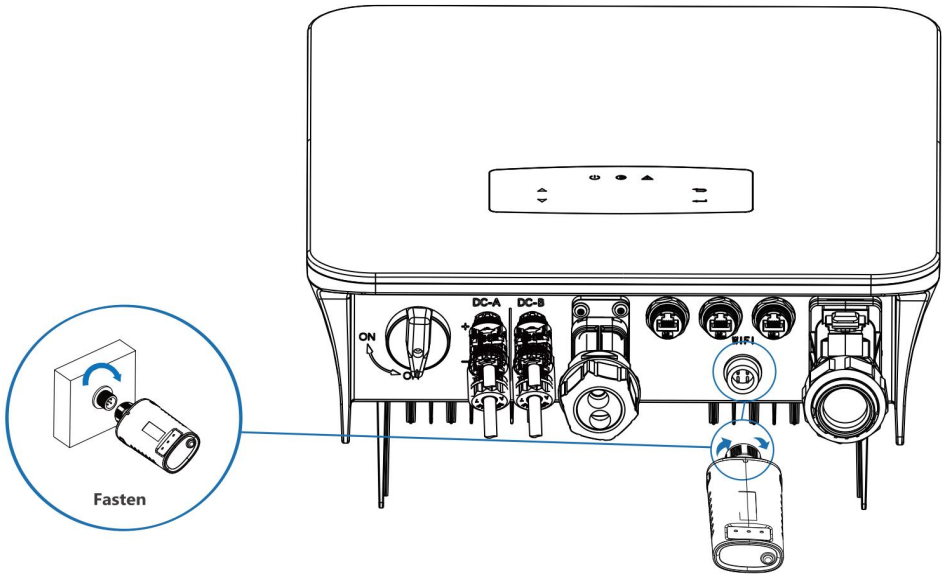


Note：The illustration is a reference image, your divice may differ.

**Step 2:**

Turn on the DC switch and AC circuit breaker, and wait until the LED indicator on the monitoring module flashes, indicating that the monitoring module is successfully connected.

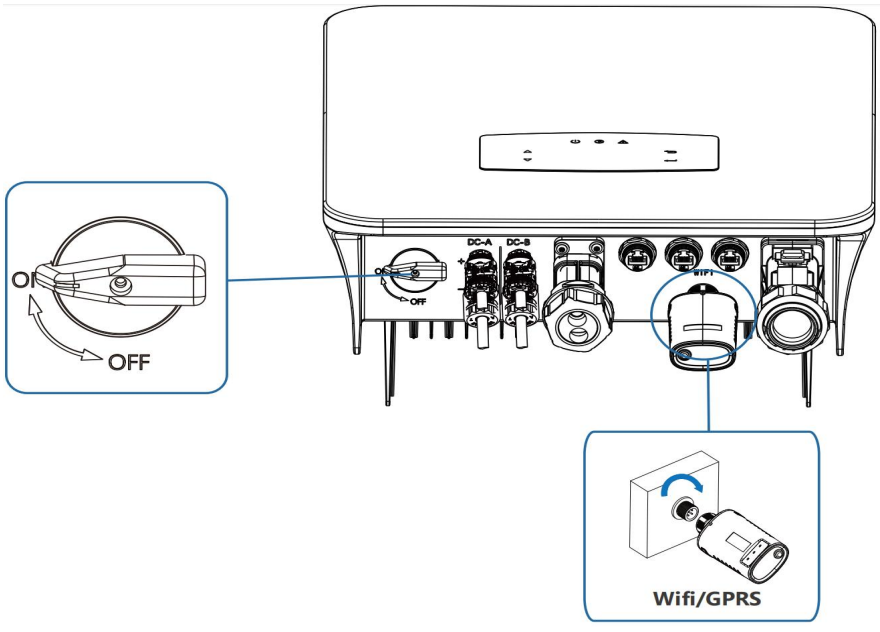


Note：The illustration is a reference image, your divice may differ.

# Installation (Cont.)

**Earth Connection**

**Note:** A second protective earth (PE) terminal should be connected to the inverter. This prevents electric shock if the original protective PE wire fails.

**Step 1:**

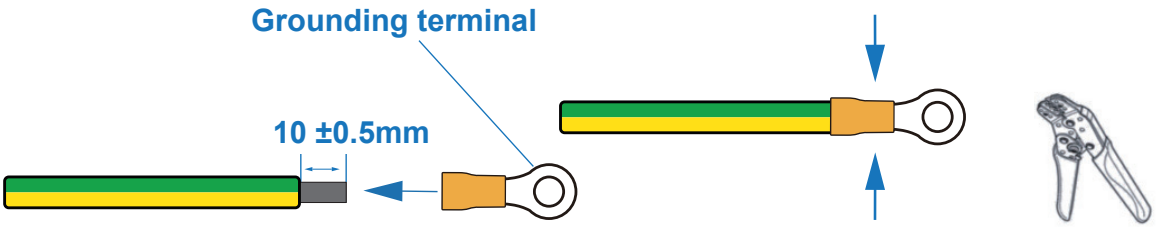


Note：The illustration is a reference image, your divice may differ.

**Note**: Earth cable PE suggestion: Cross-section (Copper) 4-6 mm² / 10 AWG.

**Step 2:**

Fix the grounding screw to the grounding connection of the machine housing.

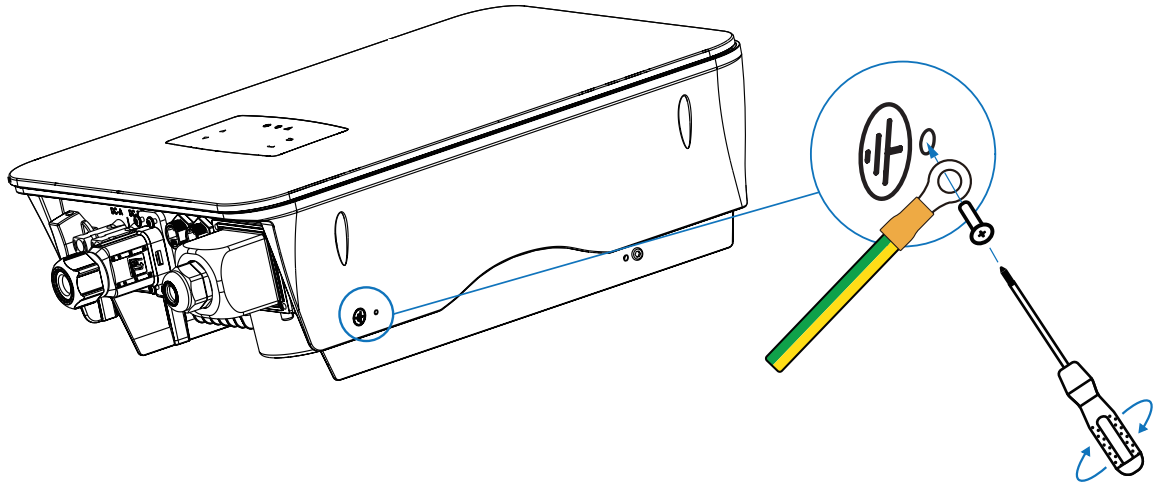

Note：The illustration is a reference image, your divice may differ.

**Note:** Make sure the earth cables on the inverter and solar panel frame are separate.

# Operation

## Control Panel

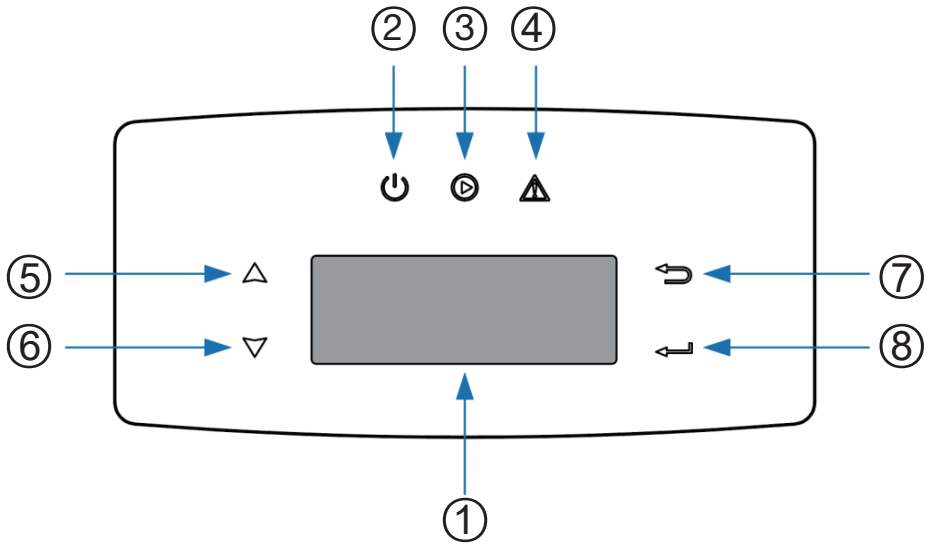


Note：The illustration is a reference image, your divice may differ.

| No. | Items | No. | Items |
|---|---|---|---|
| 1 | LCD Display | 5 | **UP** Touch Button |
| 2 | **POWER** LED Indicator | 6 | **DOWN** Touch Button |
| 3 | **GRID** LED Indicator | 7 | **BACK** Touch Button |
| 4 | **FAULT** LED Indicator | 8 | **ENTER** Touch Button |

**Note:** Hold the UP/DOWN button to quickly scroll through the options.

| Sign | Power | Color | Explanation |
|---|---|---|---|
| **POWER** | ON | Green | The inverter is stand-by |
| | OFF | | The inverter is power off |
| **GRID** | ON | Green | The inverter is feeding power |
| | OFF | | The inverter is not feeding power |
| **FAULT** | ON | Red | Fault occurred |
| | OFF | | No fault |

# Operation (Cont.)

## Menu Overview

IDL1P hybrid inverter has a LCD for clearly operating, and menu of the LCD can be presented as the following:

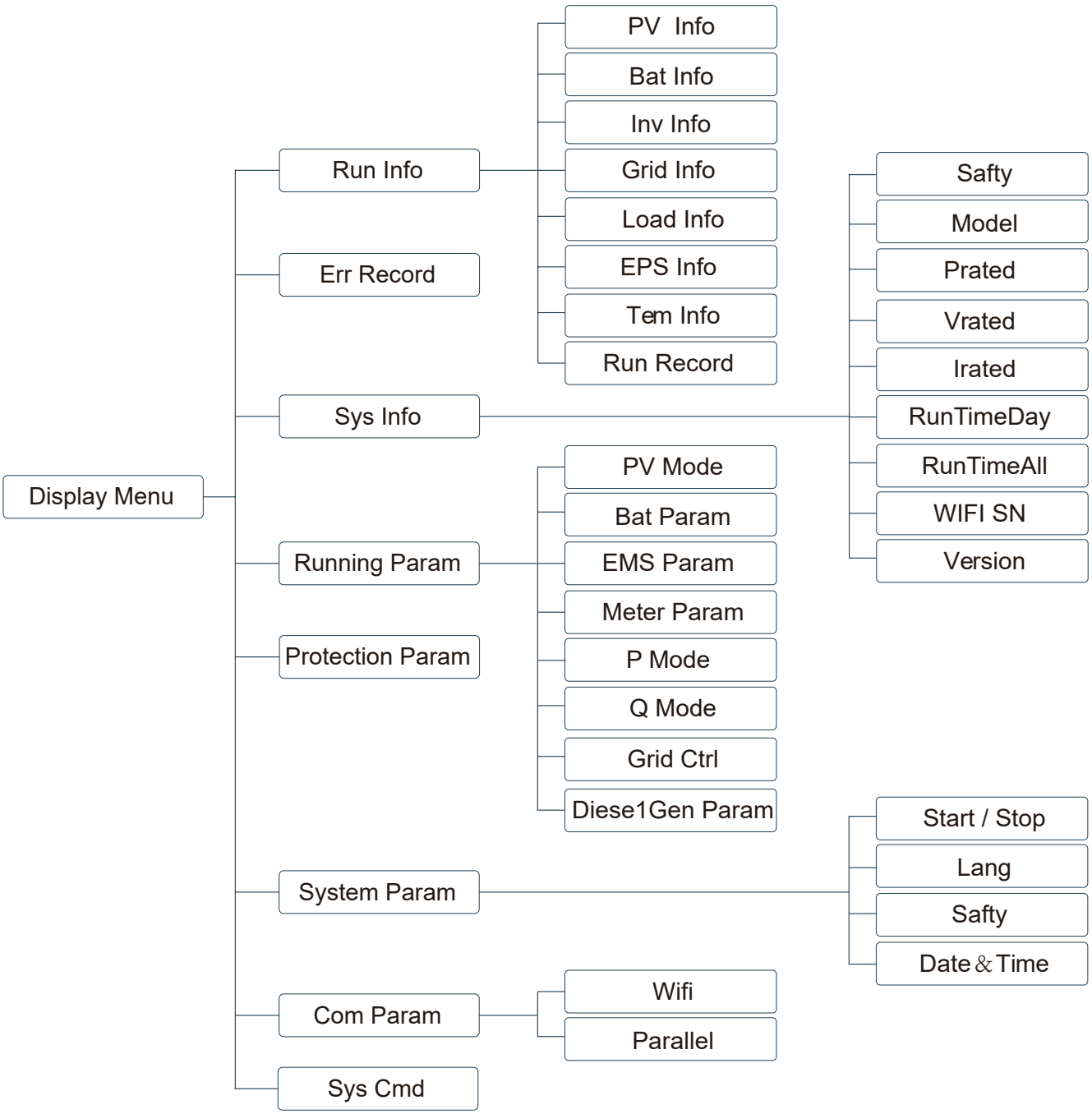

# Operation (Cont.)

## Inverter Setting

The setting is for IDL1P Hybrid inverter. If you have any questions, please don't hesitate to contact us.

**Time and Date**

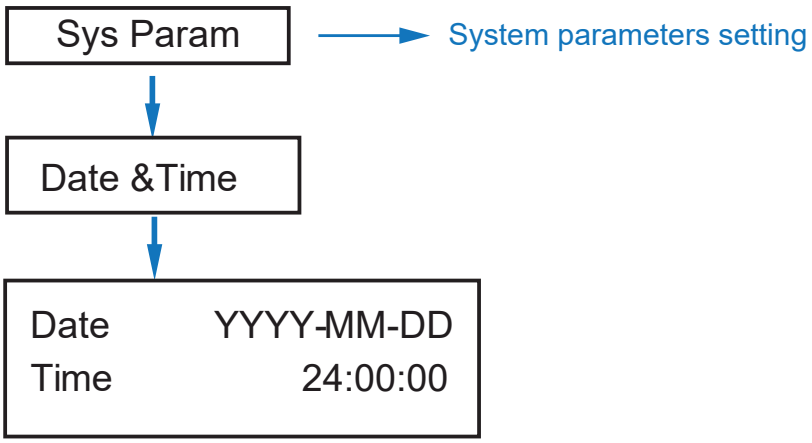


**Safety**

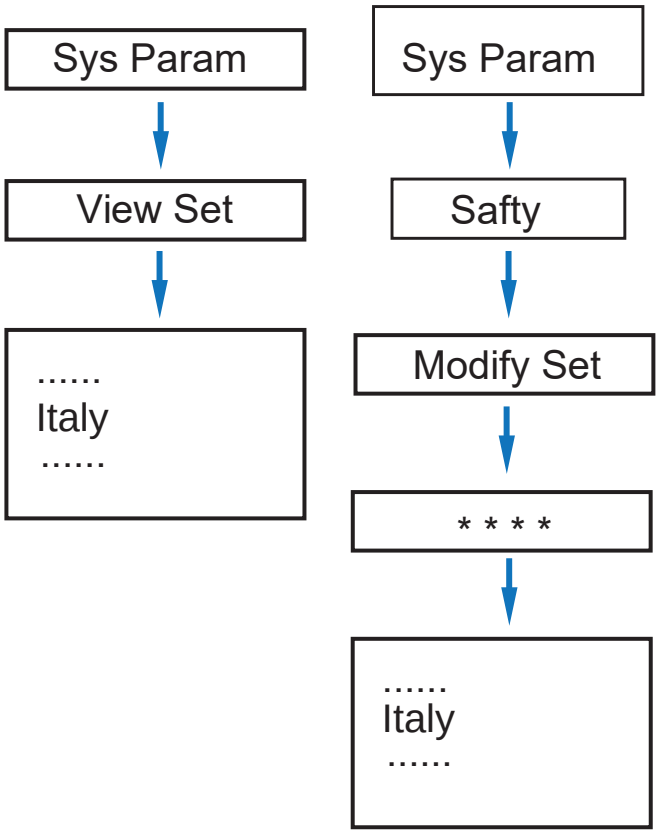


**Note:** Select the safety settings according to the requirements of the installation site.

# Operation (Cont.)

**Lithium Battery**

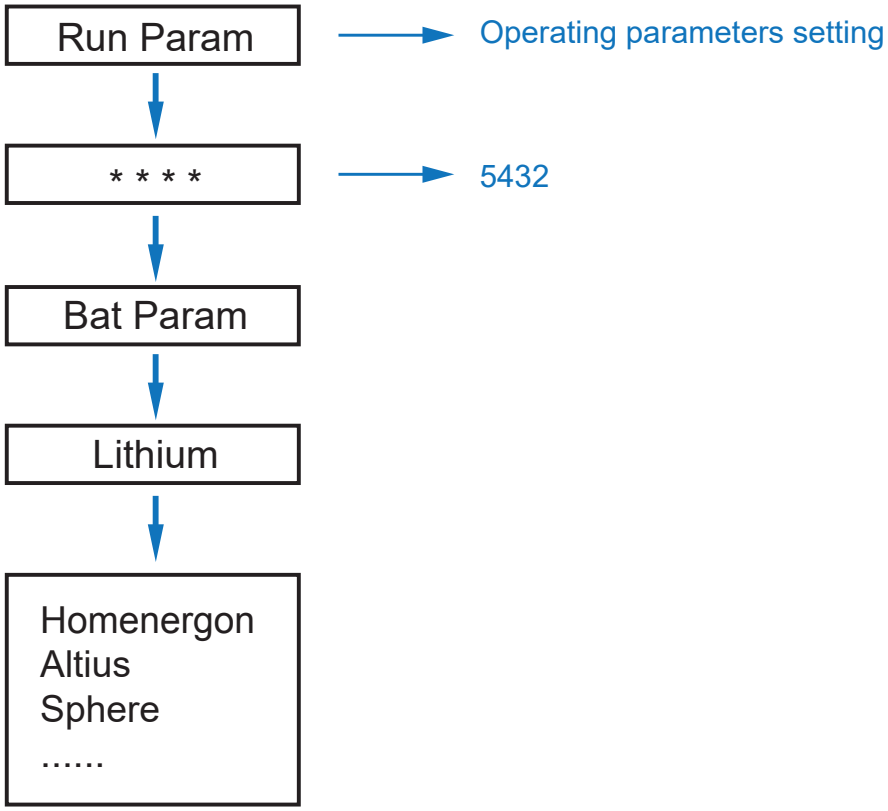


**Note:** Please select the correct battery brand.

**PV Mode**

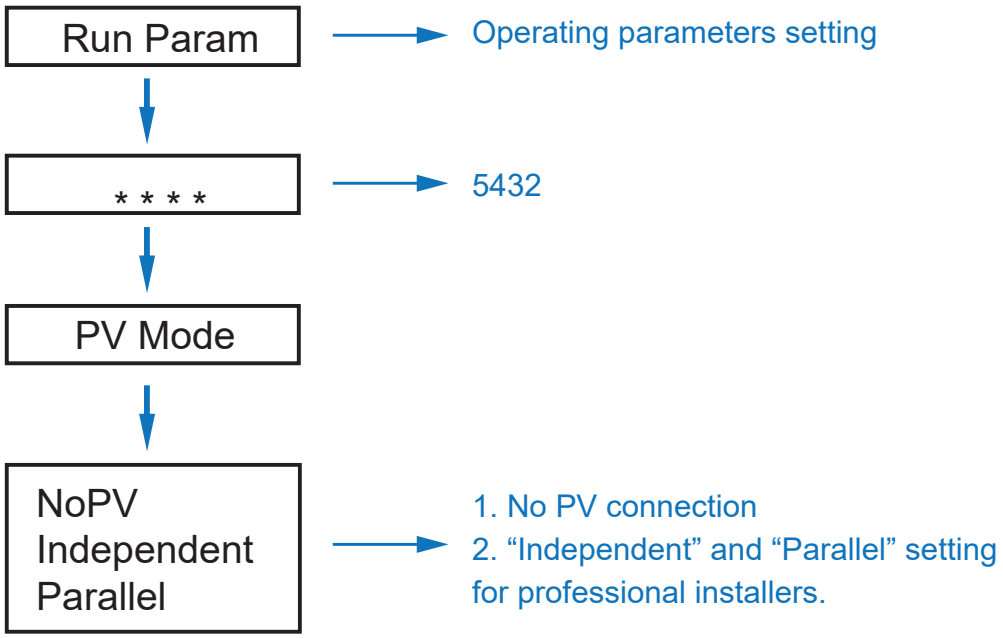

# Operation (Cont.)

**Lead Acid**

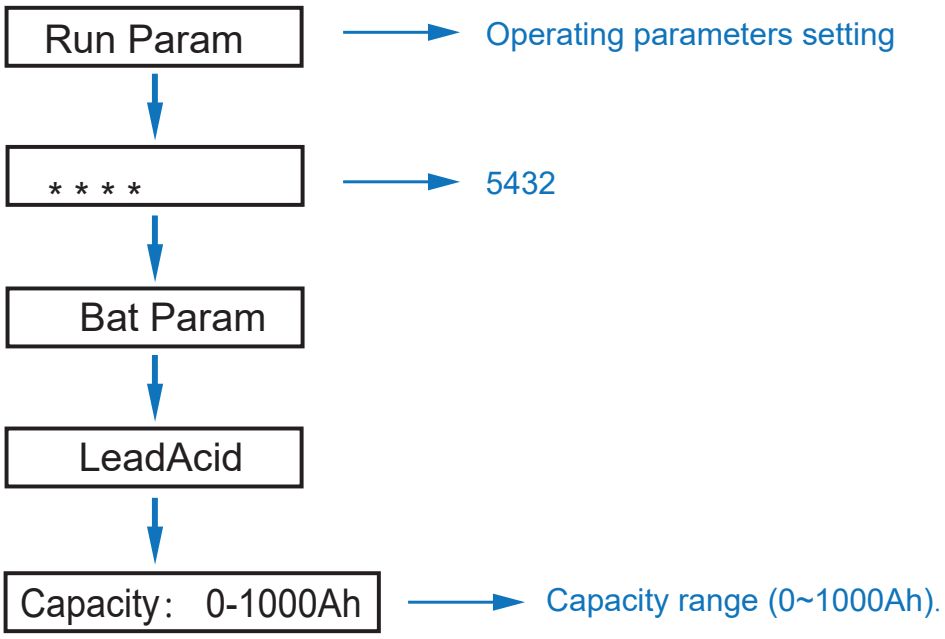


**Energy Management System (EMS Param)**

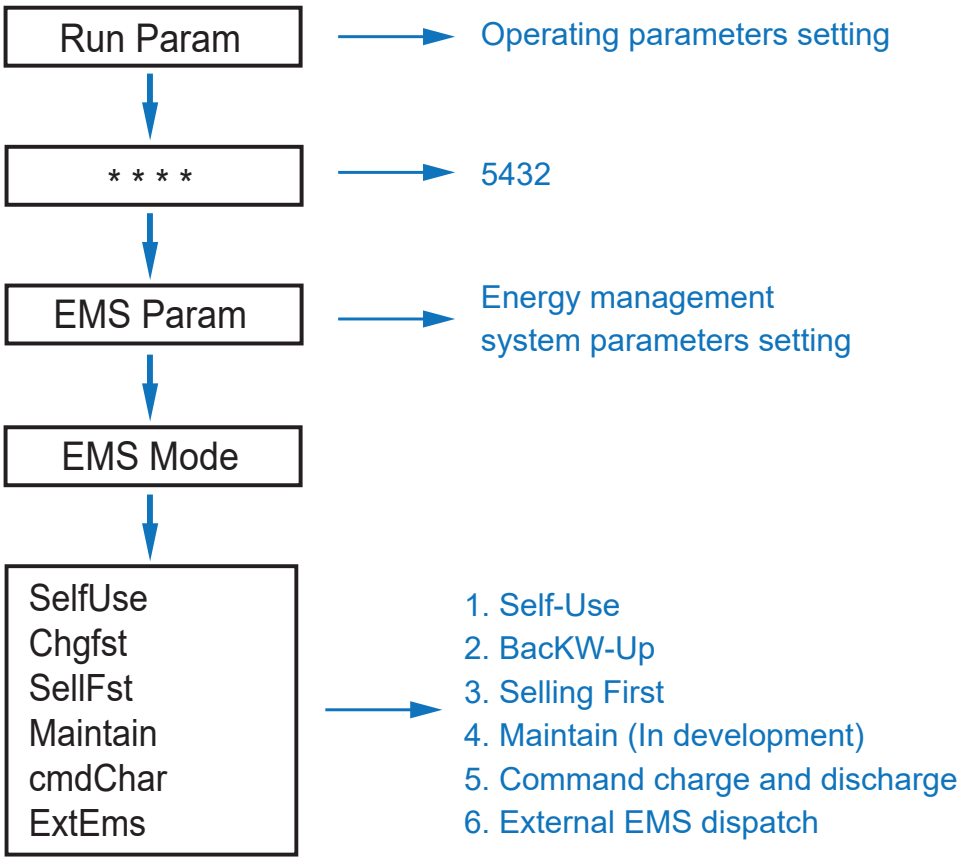


**Note:** For a detailed explanation of each mode, please see the “Introduction” section of this manual.

# Operation (Cont.)

**Time of Use**

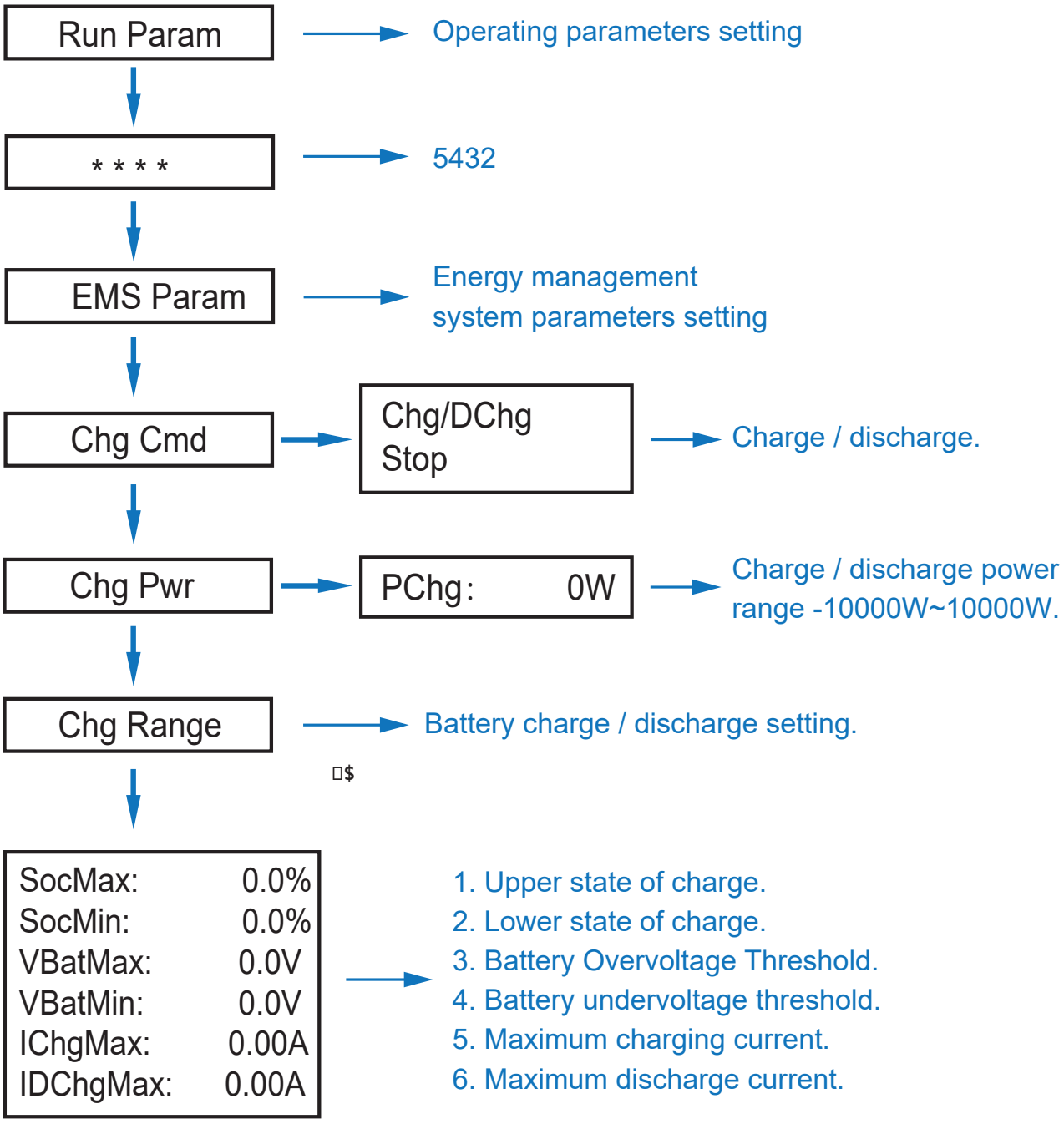


**Note:** Timed charge and discharge need to complete the three settings of “Chg Cmd”, “Chg Pwr” and “Chg Range”, otherwise it will not work properly.

# Operation (Cont.)

**AC Charging**

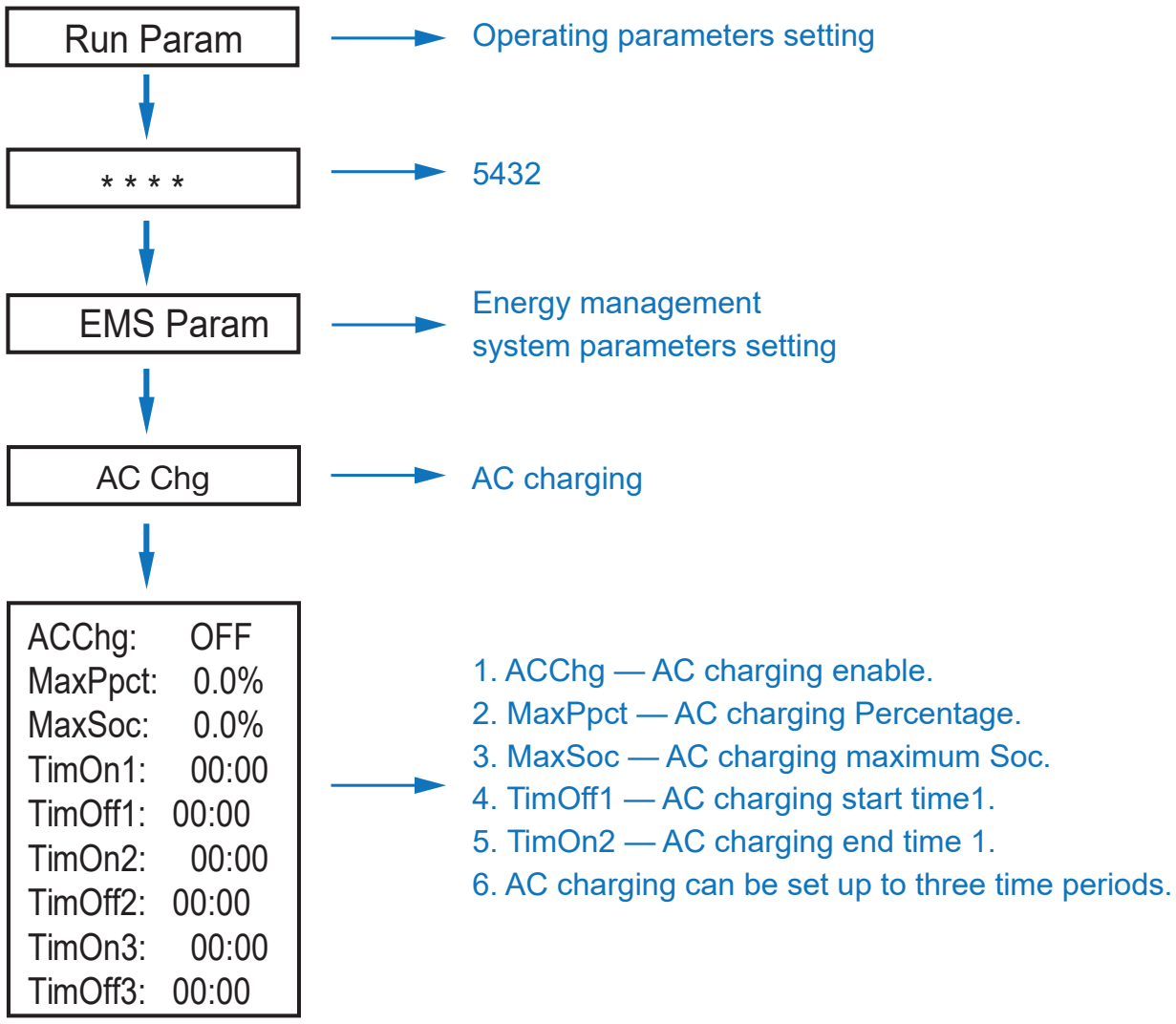


**Forced Charging**

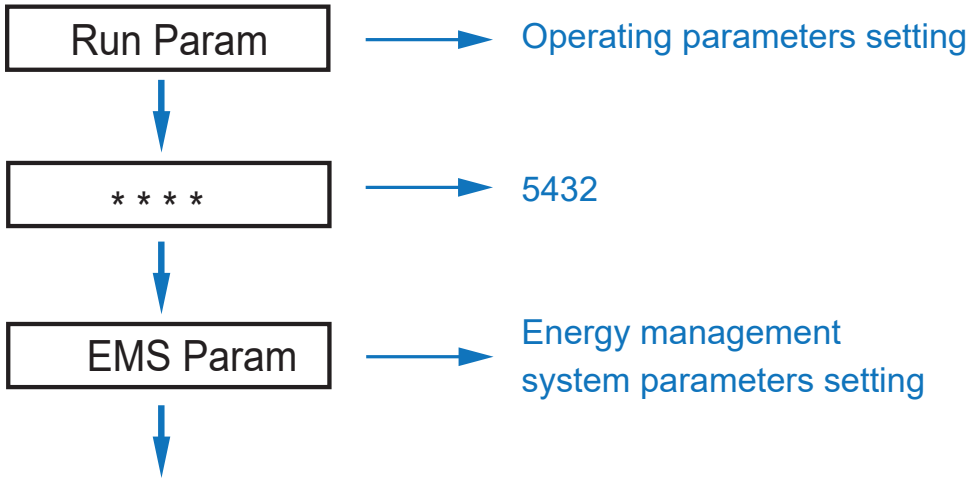

# Operation (Cont.)

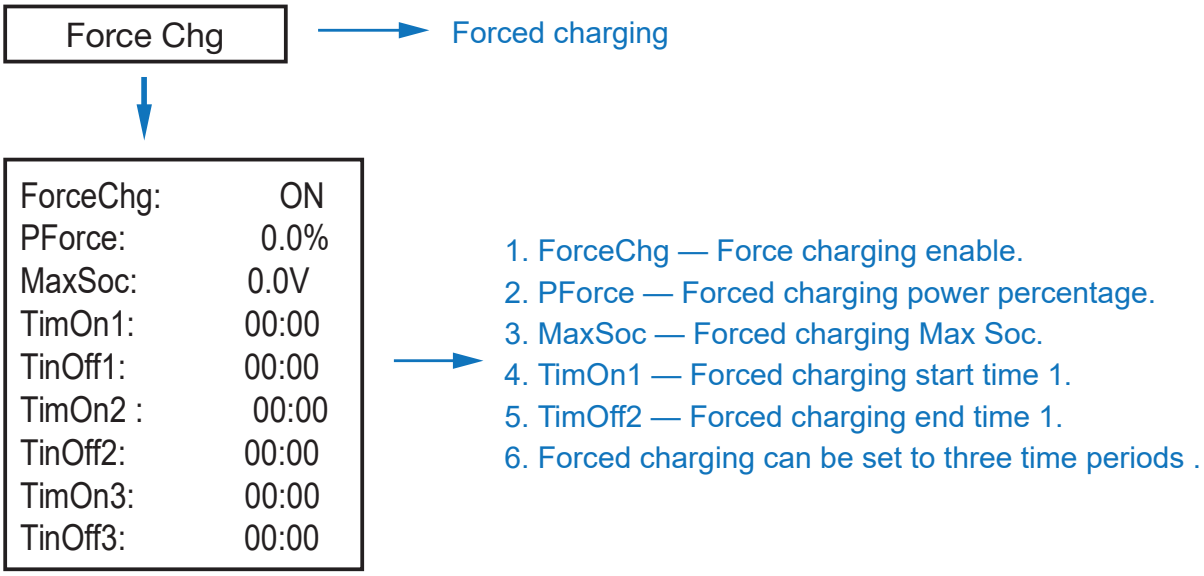


**Forced Discharging**

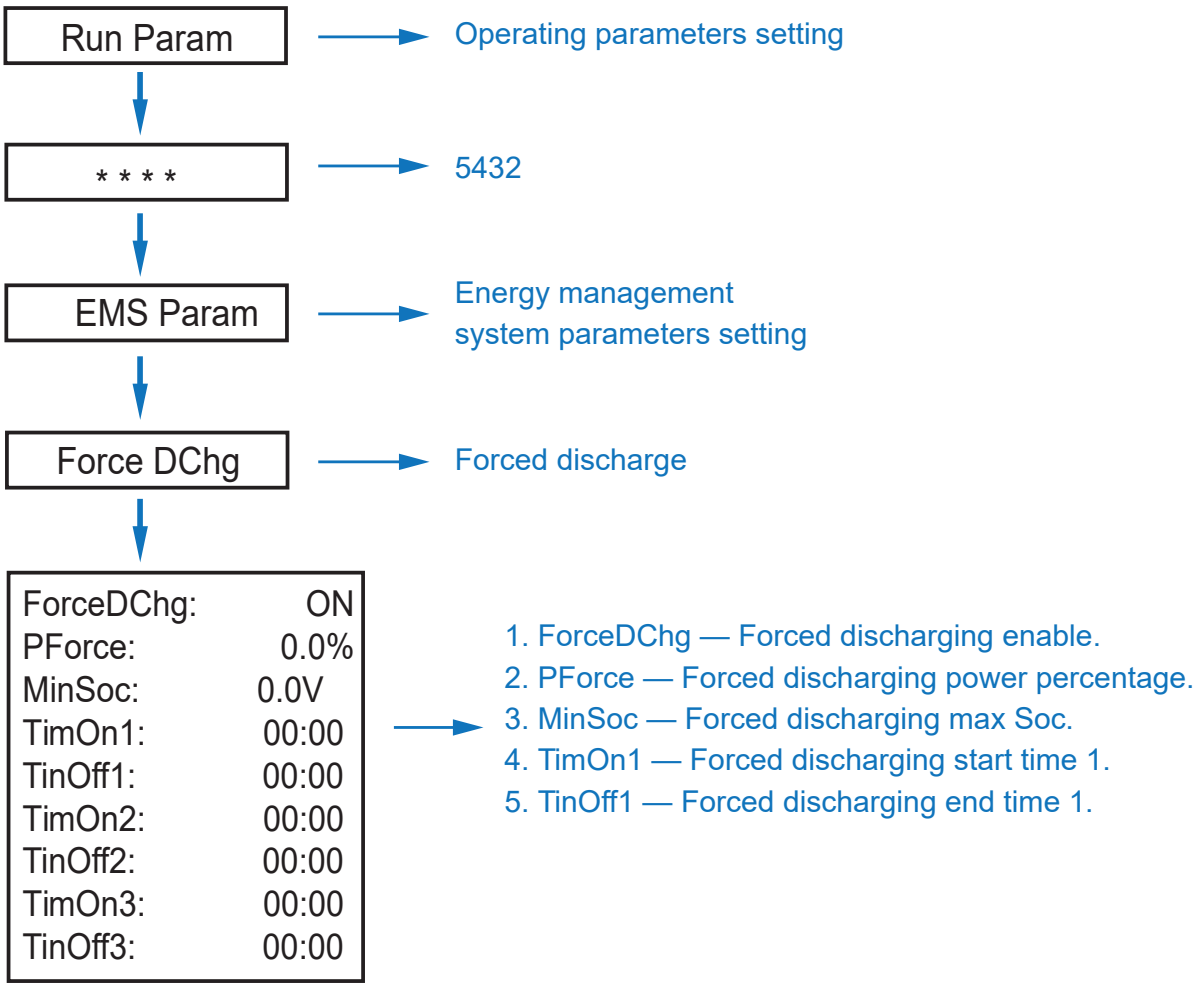

# Operation (Cont.)

**Protection Parameters**

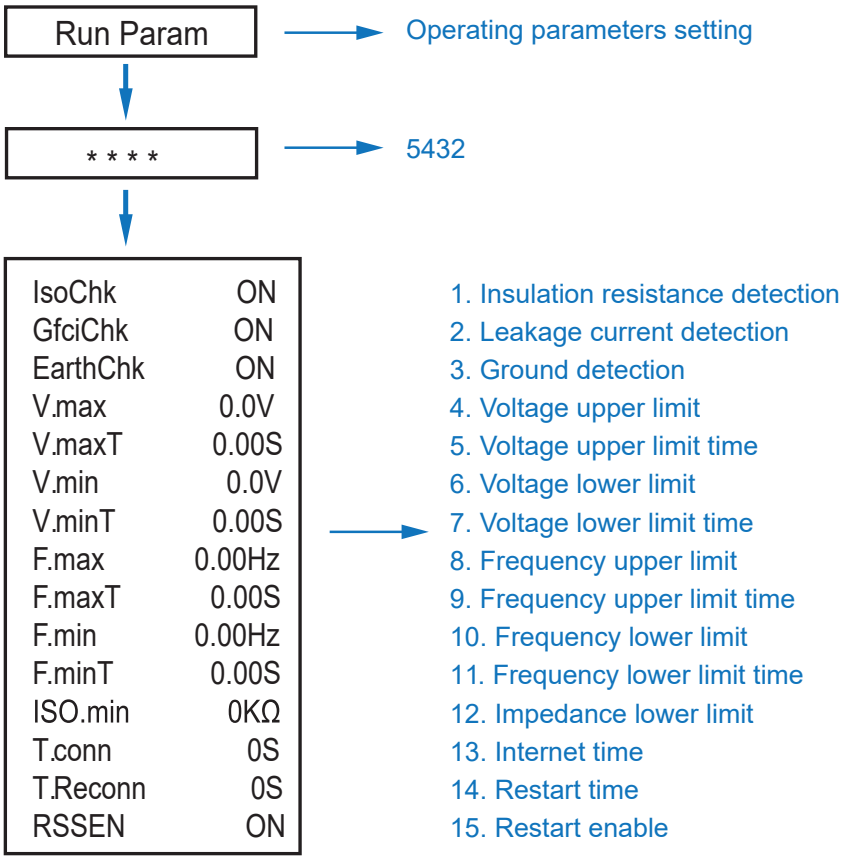


**Note:** When modifying parameters, you need to pay attention to the unit.

**Multi-Machine in Parallel**

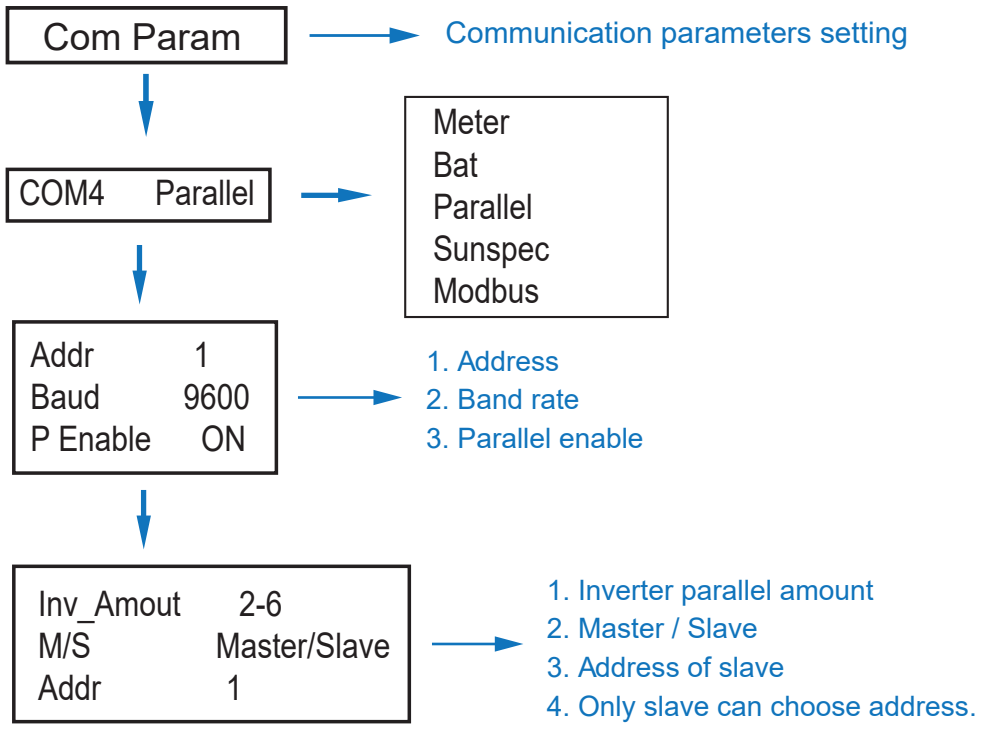

# Operation (Cont.)

**DRM Setting (DRMS)**

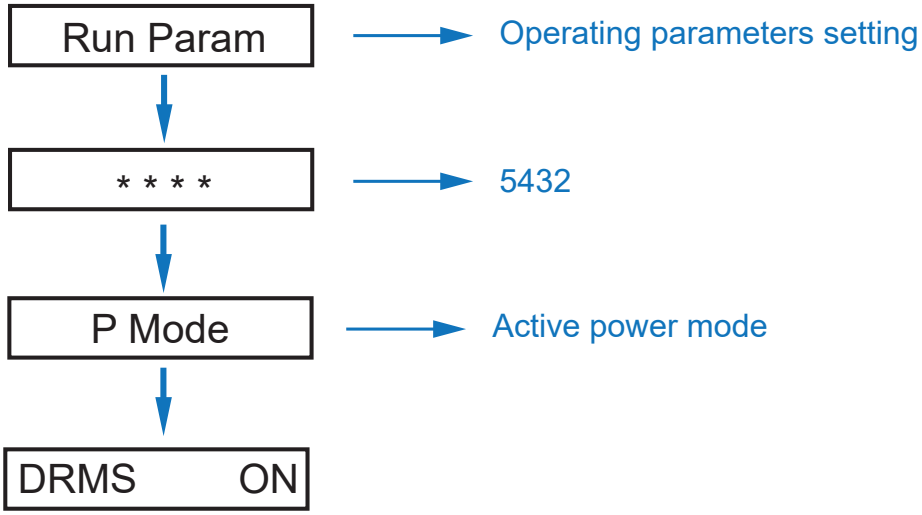


**Note:** If EarthChk is not turned on, it cannot detect whether the machine is grounded. After EarthChk and DRMS functions are turned on, the power must be cut off before normal use. If the machine display shows “J04”, it means that the machine is not connected to the ground wire. EarthChk settings refer to “Protection parameters”.

**Ground Detection**

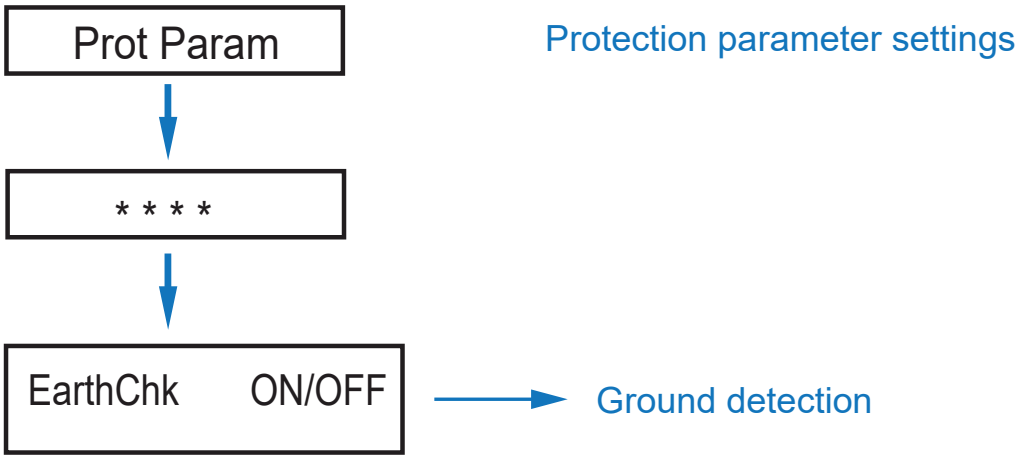


**Note:**
This inverter complies with IEC 62109 clause 13.9 for earth fault alarm monitoring.
If an Earth Fault Alarm occurs, the fault code “J 04” will be displayed on the inverter screen / the LED indicator “Alarm” will light up.

**Note:**
The product is to be installed in a high traffic area where the fault is likely to be seen.

# Operation (Cont.)

**Enable Power Quality Response Modes**

**a) Active Power Control Power Factor**

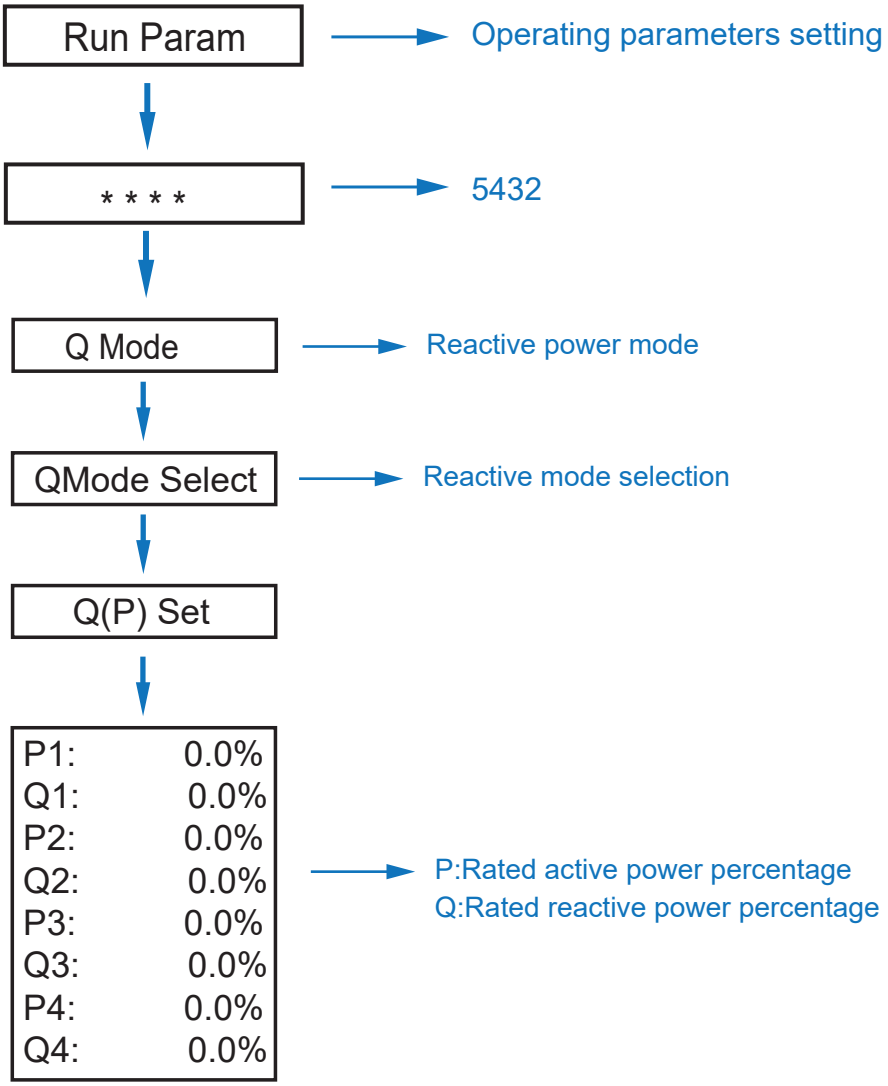


**Note:** When Q(P) Set is set, Power Quality Response Mode is enabled.

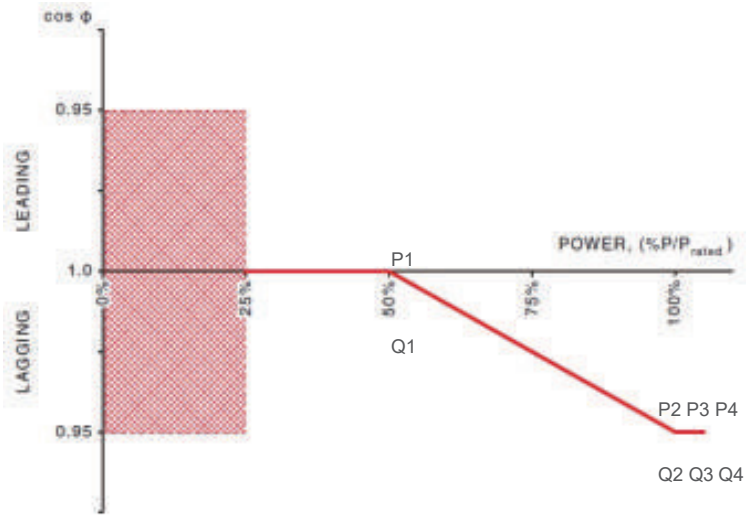


Note：The illustration is a reference image, your divice may differ.

# Operation (Cont.)

**b) Voltage Control Reactive Power**

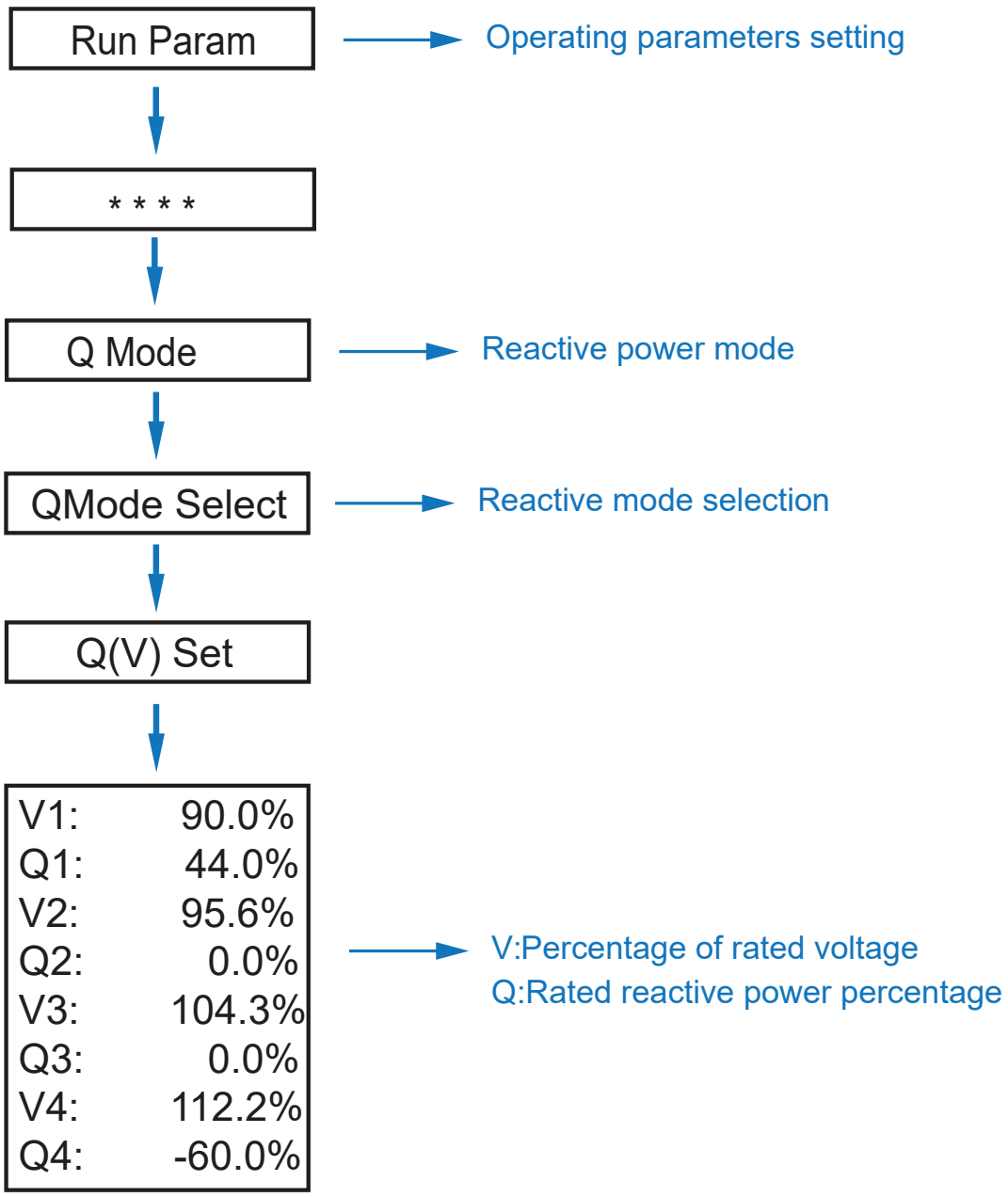


**Note:** When Q(V) Set is set, Power Quality Response Mode is enabled.
**Note:** Volt-var is enabled by default.

# Operation (Cont.)

**c) Fixed Power Factor**

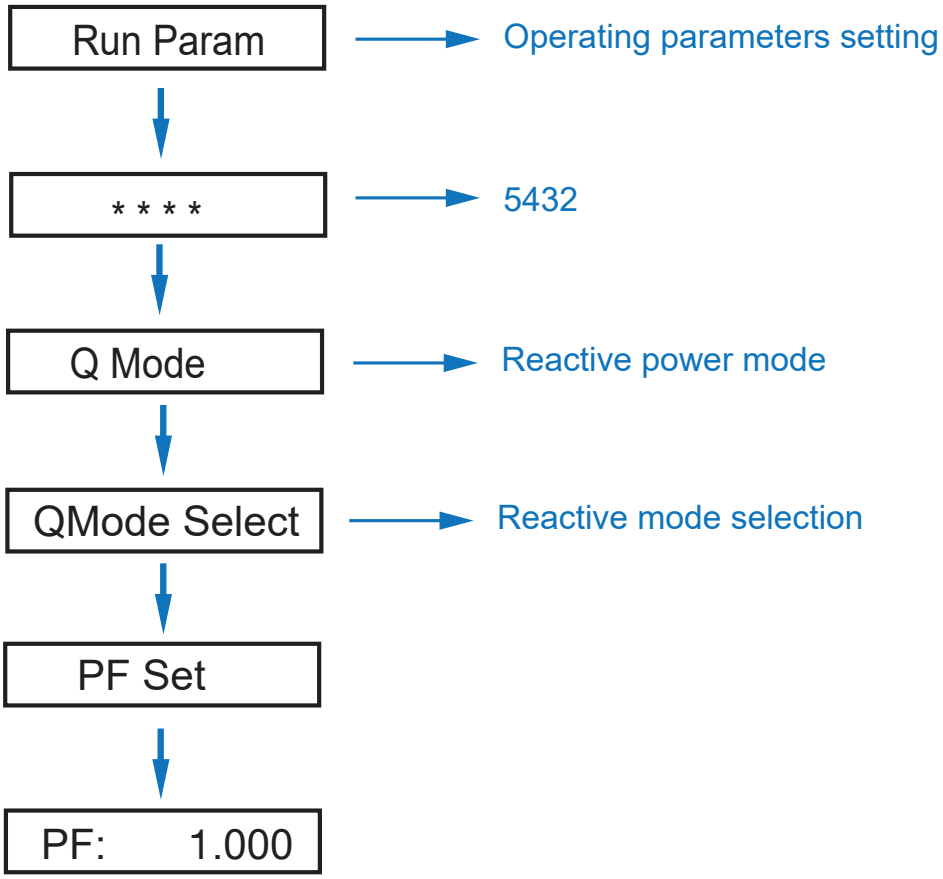


**Note:** Set PF (-0.8, +0.8),Resolution 0.001. When PF Set is set, Power Quality Response Mode is enabled.

**d) Fixed Reactive Power (%)**

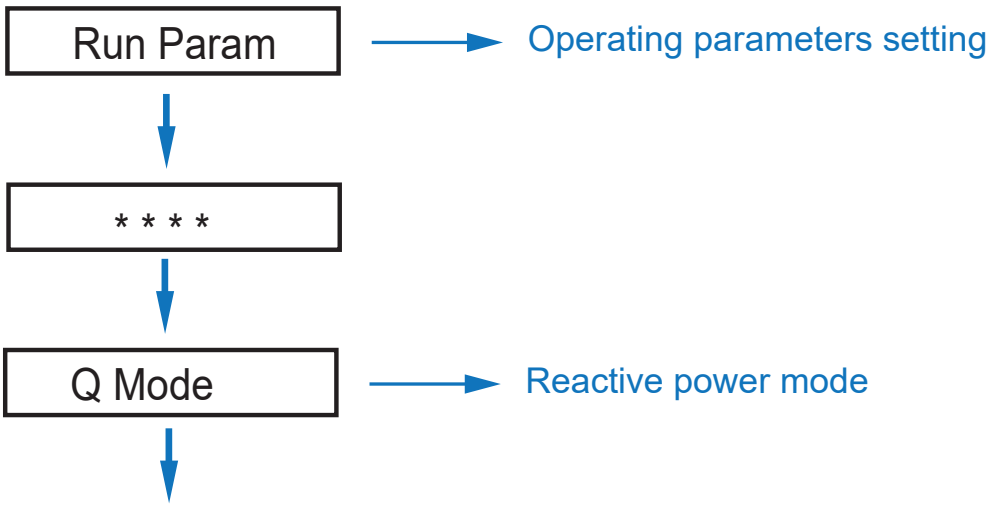

# Operation (Cont.)

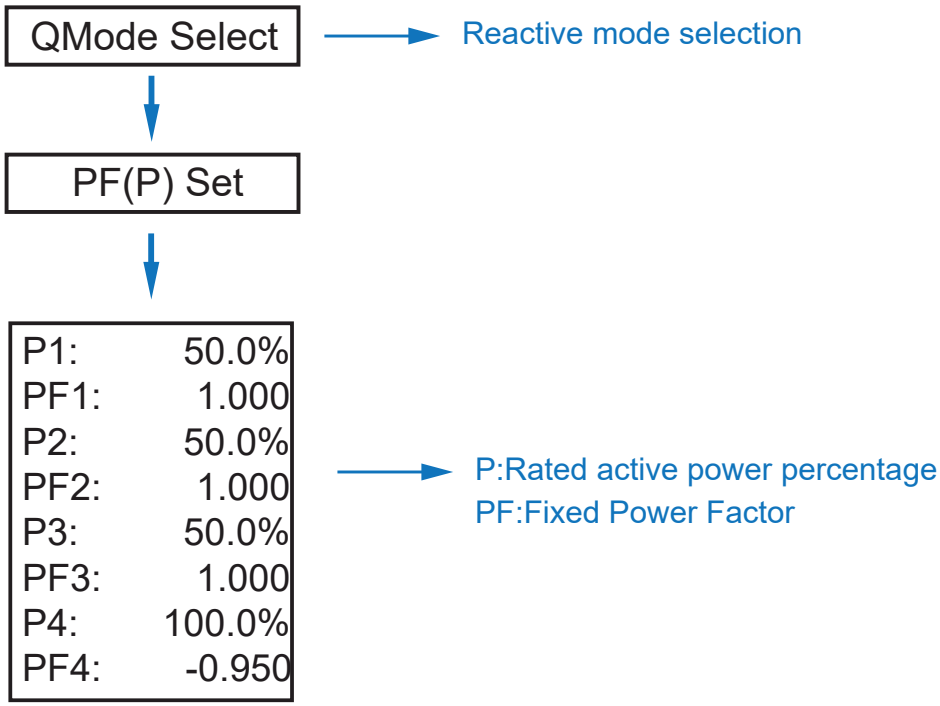


**Note:** When PF(P) Set is set, Power Quality Response Mode is enabled.

**Disable Power Quality Response Modes**

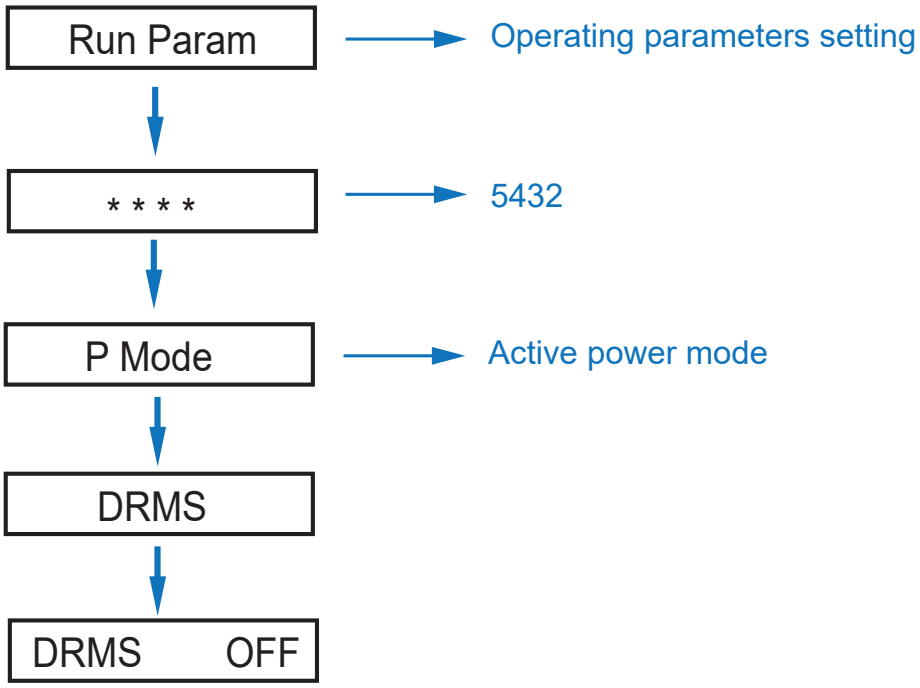


**Note:** When OFF is set, Power Quality Response Modes is disabled.

# Operation (Cont.)

**Grid Control Set**

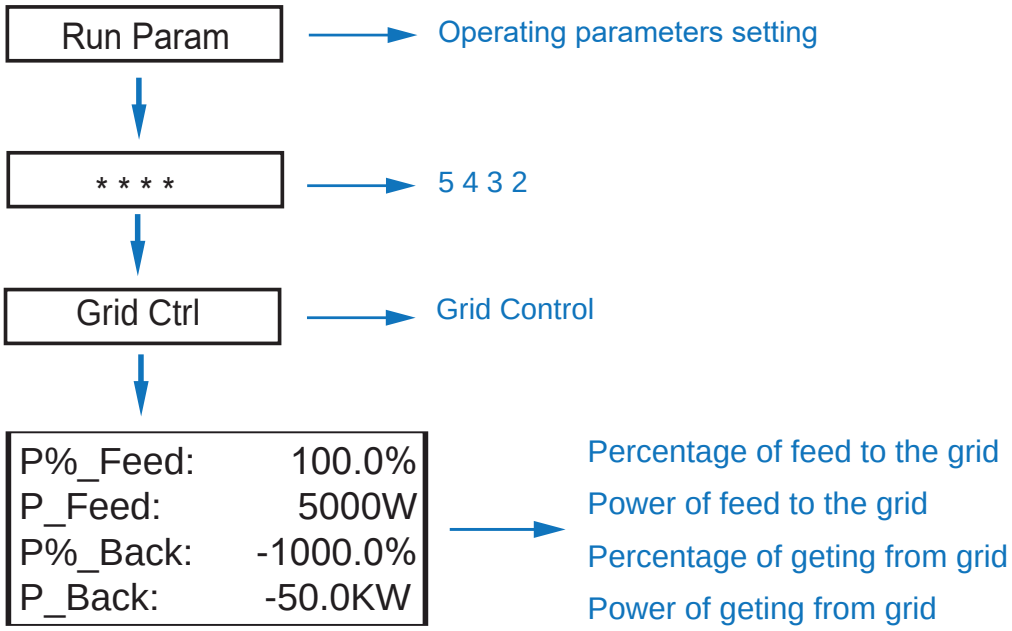


**Note:** When the power percentage is set, the power value will also change accordingly

# Operation (Cont.)

**Active Power Mode Set**

**a) Active Power Percentages**

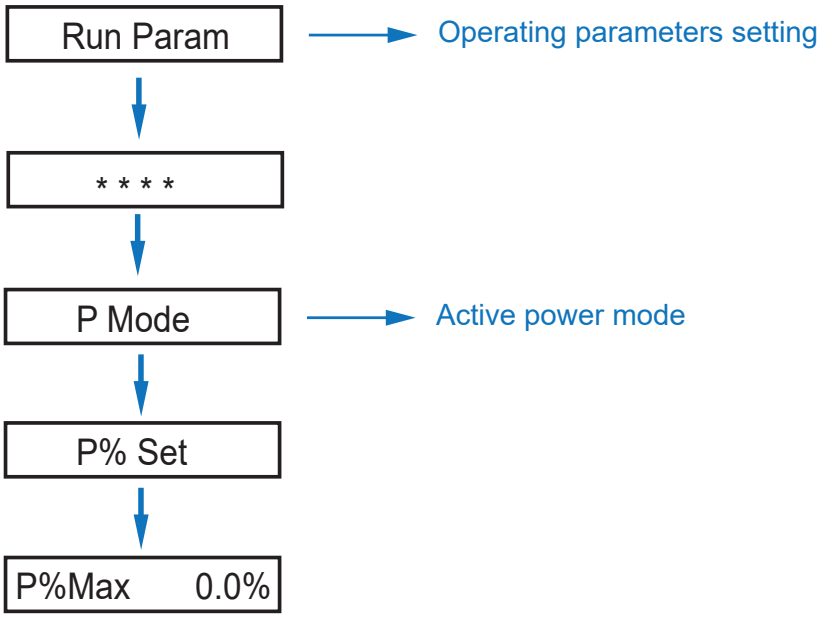


**b) Volt-watt**

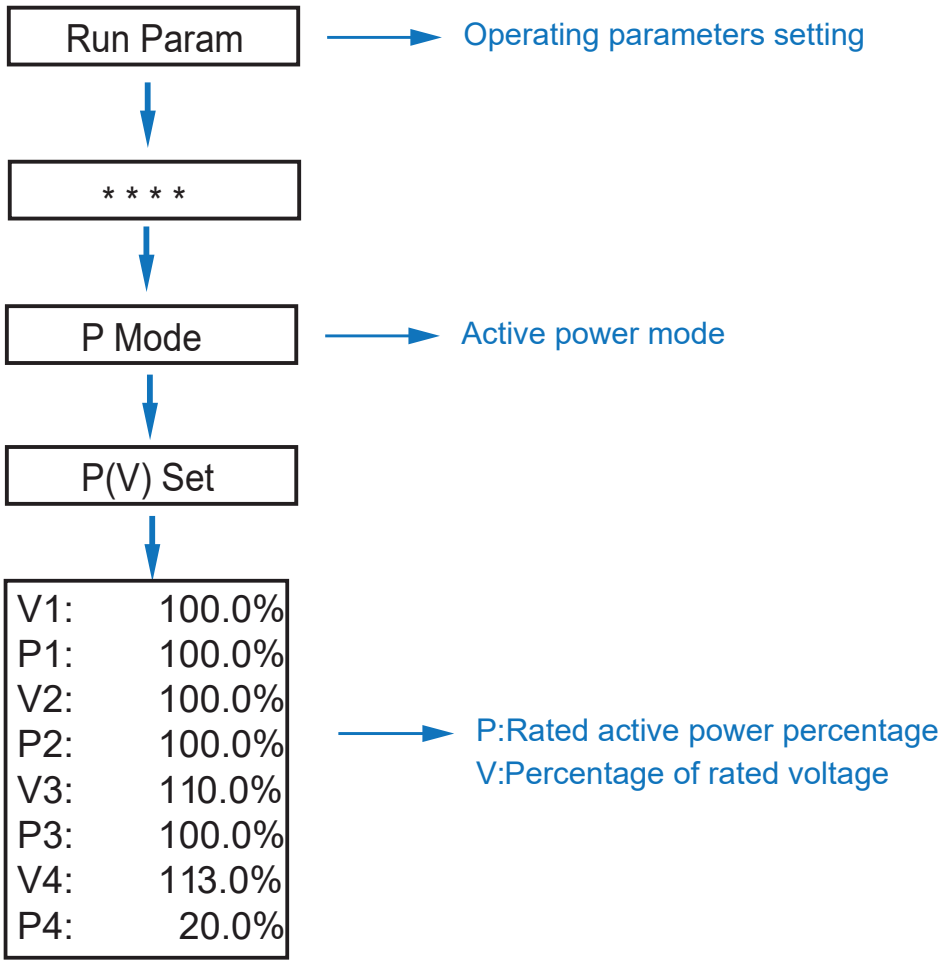

# Operation (Cont.)

**Note:** The volt–watt response mode shall be enabled by default. When charging, the software has set the parameters by default.

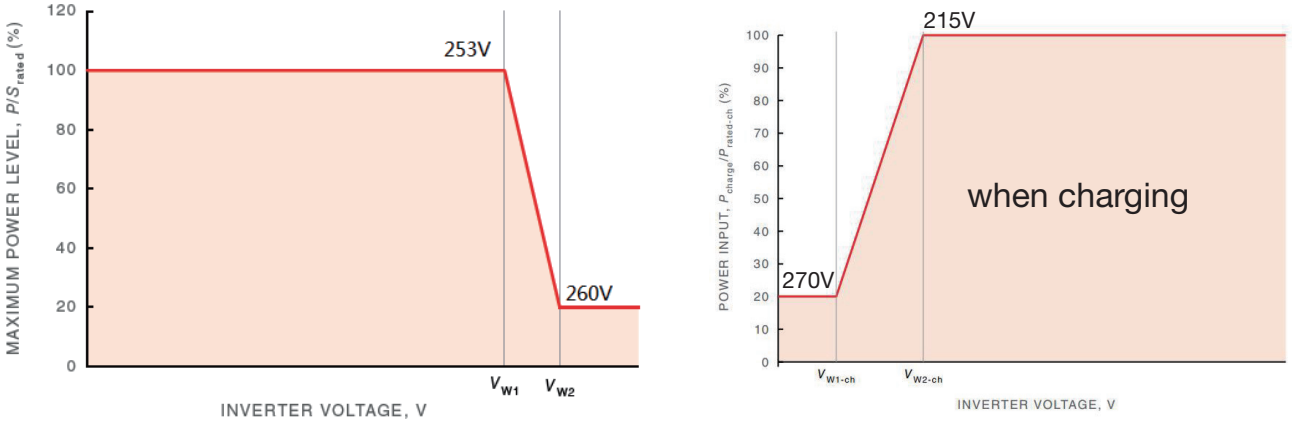


Note：The illustration is a reference image, your divice may differ.

**Frequency protection Range (Freq Range) Setting**

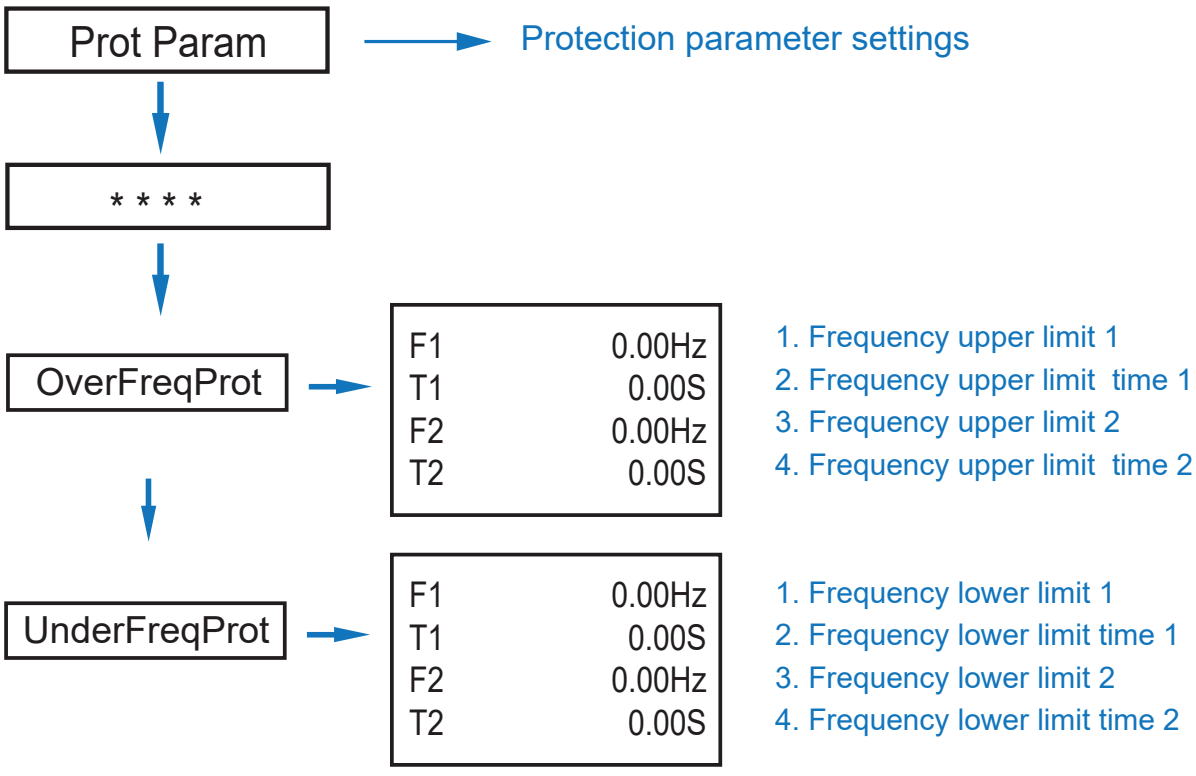


Note：The illustration is a reference image, your divice may differ.

# Operation (Cont.)

**Voltage protection Range (Volt Range) Set**

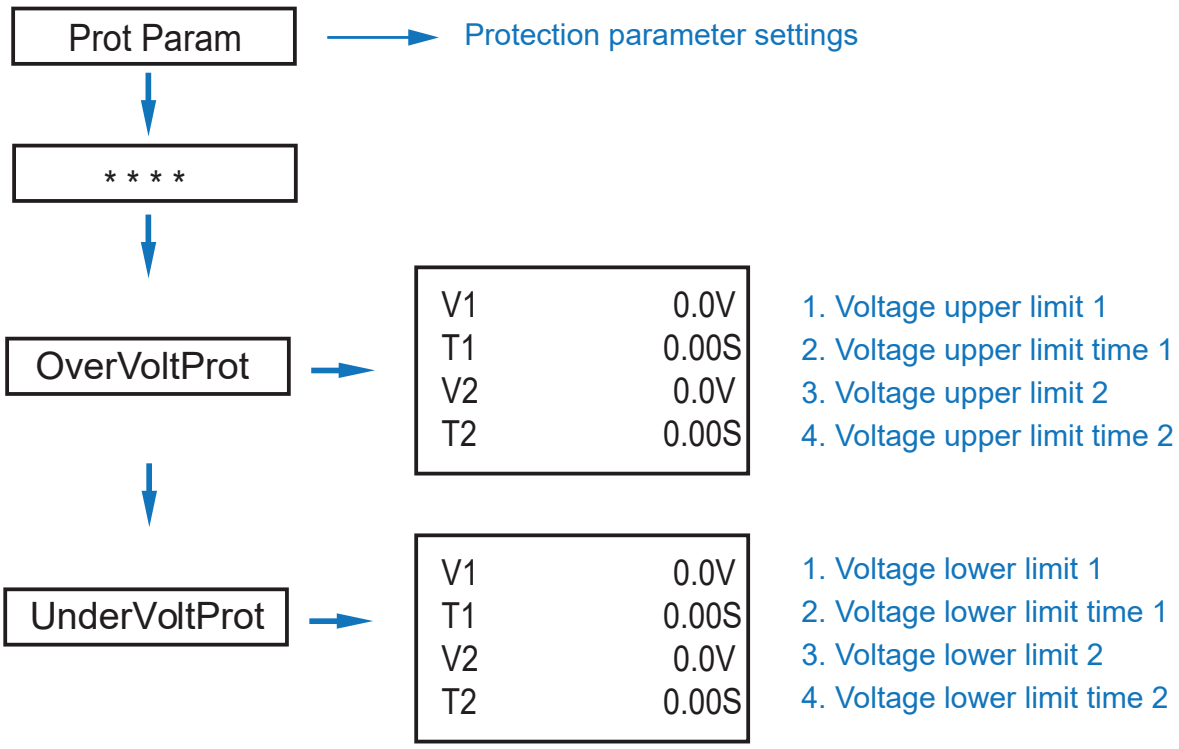


**Version**

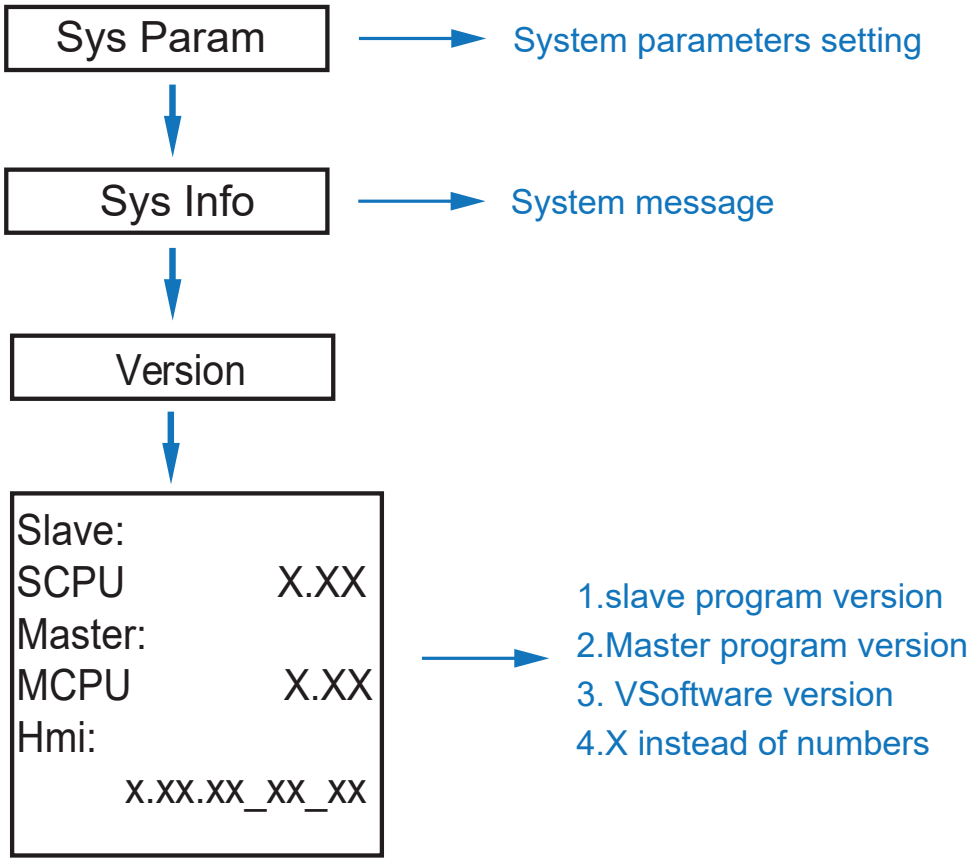

# Operation (Cont.)

**Install Dual Meters**

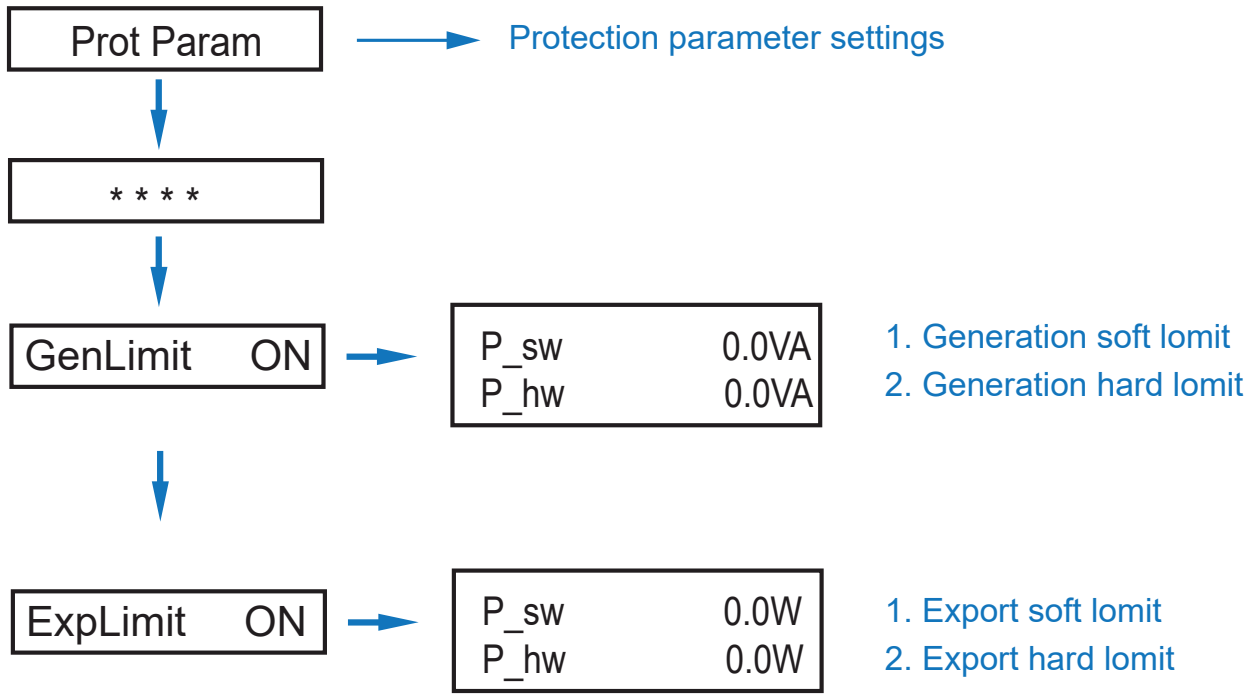


**Active Anti-Islanding Protection**

The method of active anti-islanding protection:
Shifting the frequency of the inverter away from nominal conditions in the absence of a reference frequency (frequency shift).

# Operation (Cont.)

**System Command Set (For Italy)**

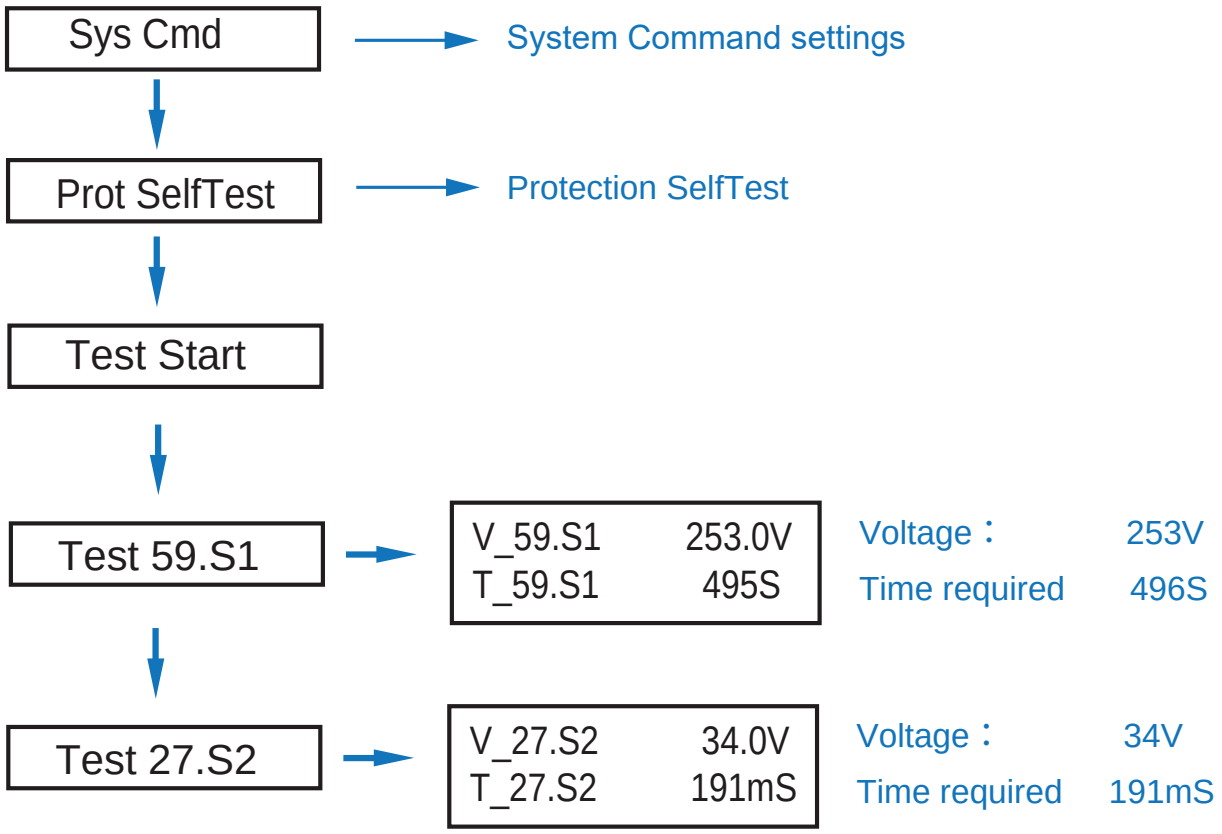


**Note:** Please refer to the table below for the test results

| Threshold | Required value | | Time required | Tolerance |
|---|---|---|---|---|
| 27.S1 | 0.85×Vn(0.85×230V) | 195.5V | 1500ms | 5% |
| 27.S2 | 0.15×Vn(0.15×230V) | 34.5V | 200ms | 5% |
| 59.S1 | 1.10×Vn(1.10×230V) | 235V | Max 603s | n.a |
| 59.S2 | 1.15×Vn(1.15×230V) | 264.5V | 200ms | 5% |
| 81＜S1 | 49.8Hz | 49.8Hz | 100ms | */-20mHz |
| 81＞S1 | 50.2Hz | 50.2Hz | 100ms | */-20mHz |
| 81＜S2 | 47.5Hz | 47.5Hz | 100ms | */-20mHz |
| 81＞S2 | 51.5Hz | 51.5Hz | 100ms | */-20mHz |

# Power ON/OFF

**Please check the following requirements before testing:**

- The installation location is suitable (see pages 12-13).
- All electrical wires are connected tightly, including PV modules, battery and AC sides (such as the grid side, EPS side, Gen Side).
- Earth line and smart meter/CT line are connected.
- These hybrid inverters should be set according to the required local grid standard.
- For more information, please contact After Sales Support.

## Power ON

- Turn on the DC switch.
- After the LED illuminates, the hybrid inverter should be set following the instructions on page 30 for first time use.
- When the inverter is running under normal mode, the running indicator will light up.

## Power OFF

- Turn off the DC switch (in the hybrid inverter) and all extra breakers.
- Note: The hybrid inverter should be restarted after a minimum of 5 minutes.

## Restarting

- To restart this device, first power it off, as described above.
- Then, after a minimum of five minutes, power it back on again, as described above.

# Wi-Fi Connection

**Note:**

- Please read this manual carefully before using products and keep it in the place where O&M providers can easily find.
- Due to product upgrade and other factors, the content of this manual might change from time to time. Please take actual product as standard and get latest manual from Svan Trading Unless otherwise agreed herein, this manual will only be used as guidance. Any statement, information or suggestion in this manual will not take any form of responsibility.
- Without written permission, any content of this document (partly or entirely) cannot be extracted, copied or transmitted in any form by any company or individual.
- **WARNING:** Please remove WIFI Module after power off.

## Wi-Fi Module Installation

- Assemble WIFI Module to the inverter communication interface as shown in the diagram.

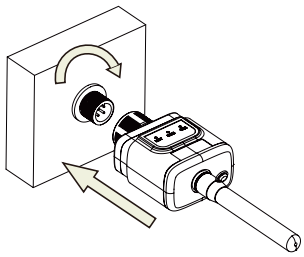

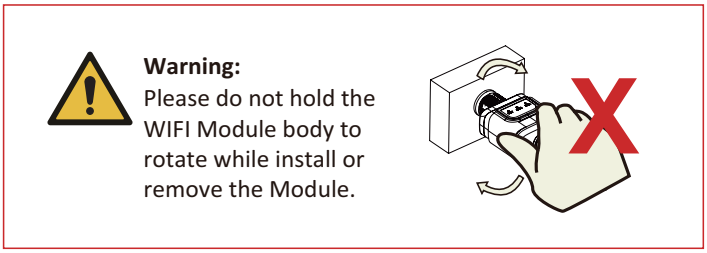


Note：The illustration is a reference image, your divice may differ.

## Wi-Fi Module Status

- Check the indicator light.

| Lights | Implication | Status Description(All lights are single green lights.) |
|---|---|---|
| NET | Communication with router | 1.Light off: Connection to the router failed.<br>2.On 1s/Off 1s(Slow fl ash): Contection to the router succeeded.<br>3.Light keeps on: Connection to the server succeeded.<br>4.On 100ms/Off 100ms(Fast flash): Distributtng network fast. |
| COM | Communication with inverter | 1.Light keeps on: WIFI Module connected to the inverter.<br>2.Light off: Connection to the inverter failed.<br>3.On 1s/Off 1s(Slow flash): Communicating with inverter. |
| READY | WIFI Module running status | 1.Light off: Running abnormally.<br>2.On 1s/Off 1s (Slow flash): Running normally.<br>3.On 100ms/Off 100ms(Fast flash): Restore factory settings . |

# Wi-Fi Connection (Cont.)

The normal operation status of the WIFI Module, when router connected to the network normally:

1. Connection to the server succeeded: NET light keeps on after the WIFI Module powered on.
2. WIFI Module running normally: READY light flashes.
3. Connection to the inverter succeeded: COM light keeps on.

## Abnormal State Processing

- If the data on platform is abnormal when the WIFI Module is running please check the table below and according to the status of indicator lights to complete a simple troubleshooting. If it still can not be resolved or indicator lights status do not show in the table below, please contact Customer Support.
- Note: Please using the following table query after power-on for 2mins at least.

| NET ● NET | COM ● COM | READY ● READY | Fault Description | Fault Cause | Solution |
|---|---|---|---|---|---|
| Any state | OFF | Slow flash | Communication with inverter abnormal | 1.Connection between WIFI Module and inverter loosen.<br>2.Inverter does not match with WIFI Module's communication rate. | 1.Check the connection between WIFI Module and inverter. Remove the WIFI Module and install again.<br>2.Check inverter's communicaon rate to see if it matches with WIFI Module's.<br>3.Long press Reset button for 5s, reboot WIFI Module. |
| OFF | ON | Slow flash | Connection between WIFI Module and router abnormal | 1.WIFI Module does not have a network.<br>2.Antenna abnormal.<br>3.Router WiFi signal strength weak. | 1.Check if the wireless network configured.<br>2.Check the antenna, if there is any damage or loose.<br>3.Enhance router WiFi signal strength.<br>4.Long press Reset button for 10s, reboot WIFI Module and networking again. |
| Slow flash | ON | Slow flash | Connection between WIFI Module and router normal, connection between logger and remote server abnormal. | 1.Router networking abnormal.<br>2.The server point of WIFI Module is modified.<br>3.Network limitation, server cannot be connected. | 1.Check if the router has access tothe network.<br>2.Check the router's setting, if the connection is limited.<br>3.Contact our customer service. |
| OFF | OFF | OFF | Power supply abnormal | 1.Connection between WIFI Module and inverter loosen or abnormal.<br>2.Inverter power insufficient.<br>3.WIFI Module abnormal. | 1.Check the connection, remove the WIFI Module and install again.<br>2.Check inverter output power.<br>3.Contact our customer service. |
| Fast flash | Any state | Any state | SMARTLINK networking status | Normal | 1.Exit automatically after 5mins.<br>2.Long press Reset button for 5s, reboot WIFI Module.<br>3.Long press Reset button for 10s, restore factory settings. |
| Any state | Any state | Fast flash | Restore factory settings | Normal | 1.Exit automatically after 1mins.<br>2.Long press Reset button for 5s, reboot WIFI Module.<br>3.Long press Reset button for 10s, restore factory settings. |

## Usage Methods and Notices for Reset Button

- Usage methods and key-press descriptions for Reset button.

Usage: Press

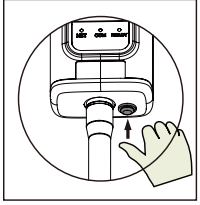

| Key-press | Status Description | Light Status |
|---|---|---|
| Short press 1s | SMARTLINK rapid networking status. | NET light flashes fast for 100ms. |
| Long press 5s | Rebooting the WIFI Module. | All lights are extinguished immediately. |
| Long press 10s | Resetting the WIFI Module. | 1.All lights are extinguished after 4s.<br>2.READY light flashes fast for 100ms. |

# Wi-Fi Connection (Cont.)

- Notices for Reset button.




Note：The illustration is a reference image, your divice may differ.

# Maintenance

**Periodic maintenance of this device is required. Please follow the below steps:**

- PV connection: twice a year
- AC connection (Grid and EPS): twice a year
- Battery connection: twice a year
- Earth connection: twice a year
- Heat sink: clean with a dry towel once a year



Dispose of packaging in an environmentally-friendly manner.
This appliance is labelled in accordance with European Directive 2012/19/EU concerning used electrical and electronic appliances (waste electrical and electronic equipment -WEEE). The guideline determines the frame work for the return and recycling of used appliances as applicablethroughout to the EU.
PACKAGE INFORMATION: Packaging materials of the product are manufactured from recyclable materials in accordance with our National Environment Regulations.Do not dispose of the packaging materials together with the domestic or other wastes. Take them to the packaging material collection points designated by the local authorities.

# Troubleshooting

The following feault messages are displayed when a fault occurs - please see the corresponding soloutions. Please contact our after sales support team for further assistance if necessary.

| Type of Fault | Code | Name | Description | Recommed Solution |
|---|---|---|---|---|
| PV Fault | A01 | PvConnectFault | PV connection type different from setup | • Check PV modules connection<br>• Check PV Mode setup Ref. Chapter 5.3. |
| | A02 | IsoFault | ISO check a mong P V panels/ w ires and g round is abnormal. | • Check PV modules wires, those wires are soaked or damaged, and then carry out rectification.<br>• if the fault occurs continuously and frequently, p lease ask help for local distributors. |
| | A03 | PvAfciFault | PV current arcing | • Check PV modules wires and connectors broken or loose connect, and then carry out rectification.<br>• If the fault occurs continuously and frequently, p lease ask help for local distributors. |
| | A04 | Pv1OverVoltFault | PV Voltage over | • Reconfiguration of PV strings, reduce the PV number of a PV string to reducing inverter PV input voltage.<br>• Suggestion that contacting with local distributors. |
| | A05 | Pv2OverVoltFault | | |
| | A06 | Pv3OverVoltFault | | |
| | A07 | Pv4OverVoltFault | | |
| | A08 | Pv5OverVoltFault | | |
| | A09 | Pv6OverVoltFault | | |
| | A10 | Pv7OverVoltFault | | |
| | A11 | Pv8OverVoltFault | | |
| | A12 | Pv9OverVoltFault | | |
| | A13 | Pv10OverVoltFault | | |
| | A14 | Pv11OverVoltFault | | |
| | A15 | Pv12OverVoltFault | | |
| | A16 | PV1ReverseFault | PV(+) and P V(-) r eversed Connection | • Check PV(+) and PV(-) Connect whether reversed or not.<br>• If reversed, make correction. |
| | A17 | PV2ReverseFault | | |
| | A18 | PV3ReverseFault | | |
| | A19 | PV4ReverseFault | | |
| | A20 | PV5ReverseFault | | |
| | A21 | PV6ReverseFault | | |

# Troubleshooting (Cont.)

| Type of Fault | Code | Name | Description | Recommed Solution |
|---|---|---|---|---|
| PV Fault | A24 | PV9ReverseFault | | |
| | A22 | PV7ReverseFault | | |
| | A25 | PV10ReverseFault | | |
| | A26 | PV11ReverseFault | | |
| | A27 | PV12ReverseFault | | |
| | A33 | Pv1AbnormalFault | PV(+) and PV(-) reversed Connection | • Check PV modules partial occlusion or cells damaged.<br>• Check PV module wires and connectors broken or loose connect, then repair it. |
| | A34 | Pv2AbnormalFault | | |
| | A35 | Pv3AbnormalFault | | |
| | A36 | Pv4AbnormalFault | | |
| | A37 | Pv5AbnormalFault | | |
| | A38 | Pv6AbnormalFault | | |
| | A39 | Pv7AbnormalFault | | |
| | A40 | Pv8AbnormalFault | | |
| | A41 | Pv9AbnormalFault | | |
| | A42 | Pv10AbnormalFault | | |
| | A43 | Pv11AbnormalFault | | |
| | A44 | Pv12AbnormalFault | | |
| | A45 | Pv13AbnormalFault | | |
| | A46 | Pv14AbnormalFault | | |
| | A47 | Pv15AbnormalFault | | |
| | A48 | Pv16AbnormalFault | | |
| | A49 | Pv17AbnormalFault | | |
| | A50 | Pv18AbnormalFault | | |
| | A51 | Pv19AbnormalFault | | |
| | A52 | Pv20AbnormalFault | | |
| | A53 | Pv21AbnormalFault | | |
| | A54 | Pv22AbnormalFault | | |
| | A55 | Pv23AbnormalFault | | |
| | A56 | Pv24AbnormalFault | | |

# Troubleshooting (Cont.)

| Type of Fault | Code | Name | Description | Recommed Solution |
|---|---|---|---|---|
| Battery Fault | B01 | PcsBatOverVoltFault | Battery voltage over or under | • Check inverters connected battery lines and connectors broken or loose connect.<br>• Carry out rectification if broken or loose.<br>• Checking battery voltage is abnormal or not, then maintenance or change new battery. |
| | B02 | PcsBatUnderVoltFault | | |
| | B03 | PcsBatInsOverVoltFaul | | |
| | B04P | csBatReversedFault | Bat. ( +) and Bat. (-) are reversed. | • Check Bat.(+) and Bat.(-)connect reversed or not.<br>• Make correction If reversed. |
| | B05P | csBatConnectFault | Battery wires loose | • Check battery wires and connectors damage or loose connect.<br>• Carry out rectification if break. |
| | B06P | csBatComFault | Battery communication abnormal | • Check battery side communication wires damage or loose connect, and then carry out rectification.<br>• Check battery is off or other abnormal, then Mastertenance battery or change new battery. |
| | B07 | PcsBatTempSensorOpen | Battery temperature sensor abnormal | • Check battery temperature sensor and connected wires damage or not , then rectification or change new one. |
| | B08 | PcsBatTempSensorShort | | |
| | B09 | BmsBatSystemFault | All these faults will be detected or reported by battery BMS. | • If specific fault high temperature or low temperature, then should change battery installed environment temperature.<br>• Restart battery, maybe can working as normal.<br>• If this fault occurs continuously and frequently, please ask help for local distributors. |
| | B10 | BmsBatVolOverFault | | |
| | B11 | BmsBatVolUnderFault | | |
| | B12 | BmsCellVolOverFault | | |
| | B13 | BmsCellVolUnderFault | | |
| | B14 | BmsCellVolUnbanceFau | | |
| | B15 | BatChgCurOverFault | | |
| | B16 | BatDChgCurOverFault | | |
| | B17 | BatTemperatureOverFa | | |
| | B18 | BatTemperatureUnderF | | |
| | B19 | CelTemperatureOverFa | | |
| | B20 | CelTemperatureUnderF | | |
| | B21 | BatIsoFault | | |
| | B22 | BatSocLowFault | | |
| | B23 | BmsInterComFault | | |
| | B24 | BatRelayFault | | |

# Troubleshooting (Cont.)

| Type of Fault | Code | Name | Description | Recommed Solution |
|---|---|---|---|---|
| Battery Fault | B25 | BatPreChault | | |
| | B26 | BmsBatChgMosFault | | |
| | B27 | BmsBatDChgMosFault | | |
| | B28 | BMSVolOVFault | | |
| | B29 | BMSVolLFault | | |
| | B30 | VolLockOpenFault | | |
| | B31 | VolLockShortFault | | |
| | B32 | ChgRefOVFault | | |
| | C01G | ridLossFault | Grid lost (islanding) | • Inverter will restart automatically when the grid return to normal.<br>• Check inverter connected with grid connectors and cable normal or not. |
| | C02G | ridUnbalanVoltFault | Grid Voltage unbalanced. | • The inverter will restart automatically when t he g rid three phase r eturn to normal.<br>• Check inverter connected with the grid connectors and wires normal o r not.connectors and cable normal or not. |
| | C03G | ridInstOverVoltFault | Grid i nstantaneous voltage over | • The inverter will restart automatically when t he g rid three phase r eturn to normal.<br>• Contact with local distributor or required grid company adjust protection parameters. |
| | C04 | Grid10MinOverVoltFaul | Grid voltage Over by 10 Minutes | • The inverter will restart automatically when t he g rid three phase r eturn to normal.<br>• Contact with local distributor or required grid company adjust 10 minutes protection voltage parameters. |
| | C05 | GridOverVoltFault | Grid voltage over | • The inverter will restart automatically when t he g rid three phase r eturn to normal.<br>• Contact with local distributor or required grid company a djust voltage protection parameters. |
| | C06 | GridUnderVoltFault | Grid voltage under | |
| | C07 | GridLineOverVoltFault | Grid line voltage over | |
| | C08 | GridLineUnderVoltFault | Grid line voltage under | |
| | C09G | ridOverFreqFault | Grid Frequency over | • The inverter will restart automatically when t he g rid three phase r eturn to normal.<br>• Contact with local distributor or required grid company adjust frequency protection parameters. |
| | C10G | ridUnderFreqFault | Grid Frequency under | |

# Troubleshooting (Cont.)

| Type of Fault | Code | Name | Description | Recommed Solution |
|---|---|---|---|---|
| Off-grid Fault | D01 | UpsOverPowerFault | 0ff-grid load over | • Reduce loads.<br>• If sometimes overload, it can be ignored, when generation power enough can be recovery.<br>• If those faults occurs continuously and frequently, please ask help for local distributors. |
| | D02G | ridConflictFault | Grid connected to BacKW-up terminal | • Check the off-grid port connection correct, disconnect both off-grid and grid ports. |
| | D03 | GenOverVoltFault | GenOverVoltFault | • Adjust generator running parameters, make t he output v oltage, frequency i n allowed range.<br>• If this fault occurs continuously and frequently, please ask h elp for local distributors. |
| | D04 | GenUnderVoltFault | GenUnderVoltFault | |
| | D05 | GenOverFreqFault | GenOverFreqFault | |
| | D06 | GenUnderFreqFault | GenUnderFreqFault | |
| DC Fault | E01 | Pv1HwOverCurrFault | PV current over, triggered by hardware protection circuit | • Power off, then restart (Ref. Chapter8).<br>• If those faults occurs continuously and frequently, please ask help for local distributors. |
| | E02 | Pv2HwOverCurrFault | | |
| | E03 | Pv3HwOverCurrFault | | |
| | E04 | Pv4HwOverCurrFault | | |
| | E05 | Pv5HwOverCurrFault | | |
| | E06 | Pv6HwOverCurrFault | | |
| | E07 | Pv7HwOverCurrFault | | |
| | E08 | Pv8HwOverCurrFault | | |
| | E09 | Pv9HwOverCurrFault | | |
| | E10 | Pv10HwOverCurrFault | | |
| | E11 | Pv11HwOverCurrFault | | |
| | E12 | Pv12HwOverCurrFault | | |
| | E13 | Pv1SwOverCurrFault | PV current over, triggered by Software logic. | • Power off, power on then restart.<br>• If those faults occurs continuously and frequently, please ask help for local distributors. |
| | E14 | Pv2SwOverCurrFault | | |
| | E15 | Pv3SwOverCurrFault | | |
| | E16 | Pv4SwOverCurrFault | | |
| | E17 | Pv5SwOverCurrFault | | |
| | E18 | Pv6SwOverCurrFault | | |
| | E19 | Pv7SwOverCurrFault | | |
| | E20 | Pv8SwOverCurrFault | | |

# Troubleshooting (Cont.)

| Type of Fault | Code | Name | Description | Recommed Solution |
|---|---|---|---|---|
| DC Fault | E21 | Pv9SwOverCurrFault | | |
| | E22 | Pv10SwOverCurrFault | | |
| | E23 | Pv11SwOverCurrFault | | |
| | E24 | Pv12SwOverCurrFault | | |
| | E33 | Boost1SelfCheck(boost)Fault | PV boost circuit abnormal when self checking | • Power off, then restart (Ref. Chapter8).<br>• If those faults continuously and frequently, please ask help for local distributors. |
| | E34 | Boost2SelfCheck(boost)Fault | | |
| | E35 | Boost3SelfCheck(boost)Fault | | |
| | E36 | Boost4SelfCheck(boost)Fault | | |
| | E37 | Boost5SelfCheck(boost)Fault | | |
| | E38 | Boost6SelfCheck(boost)Fault | | |
| | E39 | Boost7SelfCheck(boost)Fault | | |
| | E40 | Boost8SelfCheck(boost)Fault | | |
| | E41 | Boost9SelfCheck(boost)Fault | | |
| | E42 | Boost10SelfCheck(boost)Fault | | |
| | E43 | Boost11SelfCheck(boost)Fault | | |
| | E44 | Boost12SelfCheck(boost)Fault | | |
| | E45 | BusHwOverVoltFault | Bus voltage over | • Power off, then restart (Ref. Chapter8).<br>• If those faults continuously and frequently, please ask help for local distributors. |
| | E46 | BusHwOverHalfVoltFault | | |
| | E47 | BusSwOverVoltFault | | |
| | E48 | BusSwOverHalfVoltFault | | |
| | E49 | BusSwUnderVoltFault | Bus voltage under as running | |
| | E50 | BusUnbalancedFault | DC Bus voltage unbalanced | |
| | E51 | BusBalBridgeHwOver-CurFault | Bus Controller current over | • Power off, then restart (Ref. Chapter8).<br>• If those faults continuously and frequently, please ask help for local distributors. |
| | E52 | BusBalBridgeSwOver-CurFault | | |
| | E53 | BusBalBridgeSelf-CheckFault | Bus Controller abnormal when self checking | |
| | E54 | BDCHwOverCurrFault | BiDC current over | • Power off, then restart (Ref. Chapter8).<br>• If those faults continuously and frequently, please ask help for local distributors. |
| | E55 | BDCSwOverCurrFault | | |
| | E56 | BDCSelfCheckFault | BiDC abnormal as self checking | |
| | E57 | BDCSwOverVoltFault | BiDC voltage over | |
| | E58 | TransHwOverCurrFault | BiDC current over | |

# Troubleshooting (Cont.)

| Type of Fault | Code | Name | Description | Recommed Solution |
|---|---|---|---|---|
| | E59 | BDCFuseFault | BiDC fuse broken | • Change fuse. |
| | E60 | BDCRelayFault | BiDC relay abnormal | • Power off, then restart (Ref. Chapter8).<br>• If those faults continuously and frequently, please a sk h elp for local distributors. |
| AC Fault | F01 | HwOverFault | All over current/ voltage by protection hardware | • Power off, then restart (Ref. Chapter8).<br>• If those faults occurs continuously and frequently, please ask h elp for local distributors. |
| | F02 | InvHwOverCurrFault | Ac over current by protection hardware | |
| | F03 | InvROverCurrFault | R phase current over | |
| | F04 | InvSOverCurrFault | S phase current over | |
| | F05 | InvTOverCurrFault | T phase current over | |
| | F06 | GridUnbalanCurrFault | On-grid current unbalanced | |
| | F07 | DcInjOverCurrFault | DC injection current over | |
| | F08 | AcOverLeakCurrFault | Ac side leakage current over | • Check AC insulation and ground wires connect ground is well or not, then repair it.<br>• Power off, then restart (Ref. Chapter8)..<br>• If those fault occurs continuously and frequently, please ask help for local distributors. |
| | F09 | PLLFault | PLL abnormal | • Power off, then restart (Ref. Chapter8).<br>• If those fault occurs continuously and frequently, please a sk h elp for local distributors. |
| | F10 | GridRelayFault | Grid relay abnormal | |
| | F11 | UpsRelayFault | Ups relay abnormal | |
| | F12 | GenRelayFault | Generator relay abnormal | |
| | F13 | Relay4Fault | Relay4 abnormal | |
| | F14 | UpsROverCurrFault | Off-grid output current over | • When off-grid the load start impulse current is over, reduce the start impulse current load.<br>• Power off, then restart (Ref. Chapter8).<br>• If those fault occurs continuously and frequently, please ask help for local distributors. |
| | F15 | UpsSOverCurrFault | | |
| | F16 | UpsTOverCurrFault | | |
| | F17 | GenROverCurrFault | Generator current over | • Check generator output voltage, frequency i s stability, a nd adjust generator.<br>• Power off, then restart(Ref. Chapter8).<br>• If those fault occurs continuously and frequently, please ask h elp for local distributors. |
| | F18 | GenSOverCurrFault | | |
| | F19 | GenTOverCurrFault | | |
| | F20 | GenReversePowerFault | Active power injected to generator | |

# Troubleshooting (Cont.)

| Type of Fault | Code | Name | Description | Recommed Solution |
|---|---|---|---|---|
| AC Fault | F21 | UpsOverVoltFault | Off-grid output voltage over or under | • Power off, then restart (Ref. Chapter8).<br>• If those faults occurs continuously and frequently, please ask h elp for local distributors. |
| | F22 | UpsUnderVoltFault | | |
| | F23 | UpsOverFreqFault | Off-grid output frequency over or under | |
| | F24 | UpsUnderFreqFault | | |
| | F25 | DcInjOverVoltFault | Off-grid DC injection voltage over | |
| System Fault | G01 | PV1CurAdChanFault | Sampling hardware abnormal | • Power off, then restart (Ref. Chapter8).<br>• If those faults occurs continuously and frequently, p lease ask h elp for local distributors. |
| | G02 | PV2CurAdChanFault | | |
| | G03 | PV3CurAdChanFault | | |
| | G04 | PV4CurAdChanFault | | |
| | G05 | PV5CurAdChanFault | | |
| | G06 | PV6CurAdChanFault | | |
| | G07 | PV7CurAdChanFault | | |
| | G08 | PV8CurAdChanFault | | |
| | G09 | PV9CurAdChanFault | | |
| | G10 | PV10CurAdChanFault | | |
| | G11 | PV11CurAdChanFault | | |
| | G12 | PV12CurAdChanFault | | |
| | G13 | BDCCurrAdChanFault | | |
| | G14 | TransCurAdChanFault | | |
| | G15 | BalBrigCurAdChanFault | | |
| | G16 | RInvCurAdChanFault | | |
| | G17 | SInvCurAdChanFault | | |
| | G18 | TInvCurAdChanFault | | |
| | G19 | RInvDciAdChanFault | | |
| | G20 | SInvDciAdChanFault | | |
| | G21 | TInvDciAdChanFault | | |
| | G22 | LeakCurAdChanFault | | |
| | G23 | VoltRefAdChanFault | | |
| | G24 | UpsRCurAdChanFault | | |

# Troubleshooting (Cont.)

| Type of Fault | Code | Name | Description | Recommed Solution |
|---|---|---|---|---|
| System Fault | G25 | UpsSCurAdChanFault | | |
| | G26 | UpsTCurAdChanFault | | |
| | G27 | GenRCurAdChanFault | | |
| | G28 | GenSCurAdChanFault | | |
| | G29 | GenTCurAdChanFault | | |
| | G30 | UpsRDcvAdChanFault | | |
| | G31 | UpsSDcvAdChanFault | | |
| | G32 | UpsTDcvAdChanFault | | |
| | G37 | TempAdChanFault | All temperature sensors abnormal | • Power off, then restart (Ref. Chapter8).<br>• If those faults occurs continuously and frequently, please ask help for local distributors. |
| | G38 | VoltAdConflictFault | The sample value of PV, battery and BUS voltage inconsistent | |
| | G39 | CPUAdConflictFault | The sample value between master CPU and slaver CPU inconsistent | |
| | G40 | PowerCalcConflictFault | Power value between PV, battery and AC output inconsistent | |
| | G41 | EnvirOverTempFault | Installation environment temperature over or low | • Change or improve the installation environment temperature, make running temperature suitable.<br>• Power off, then restart (Ref. Chapter8).<br>• If those faults occurs continuously and frequently, please ask help for local distributors. |
| | G42 | EnvirLowTempFault | | |
| | G43 | CoolingOverTempFault | Cooling temperature over or low | |
| | G44 | CoolingLowTempFault | | |
| | G45 | OverTemp3Fault | Temperature3 over or low | |
| | G46 | LowTemp3Fault | | |
| | G47 | CpuOverTempFault | CPU temperature over | |
| | G48 | ModelConflictFault | Version conflict with inverter | • Power off, then restart (Ref. Chapter8).<br>• If those faults occurs continuously and frequently, please ask help for local distributors. |
| Inner Warnning | I01 | InterFanWarning | Fan abnormal | • Remove foreign matter logged in fan.<br>• If those faults occurs continuously and frequently, please ask help for local distributors. |
| | I02 | ExterFanWarning | | |
| | I03 | Fan3Warning | | |

# Troubleshooting (Cont.)

| Type of Fault | Code | Name | Description | Recommed Solution |
|---|---|---|---|---|
| Inner Warnning | I04 | EnvirTempAdChan-Warning | Some temperature sensors abnormal | • The warnings are not matter influence.<br>• Power off, then restart (Ref. Chapter8).<br>• If those faults occurs continuously and frequently, please ask help for local distributors. |
| | I05 | CoolingTempAdChan-Warning | | |
| | I06 | Temp3AdChanWarning | | |
| | I07 | ExtFlashComWarning | Flash abnormal | • Power off, then restart (Ref. Chapter8).<br>• If this those faults continuously and frequently, please ask help for local distributors. |
| | I08 | EepromComWarning | Eeprom abnormal | |
| | I09 | SlaveComWarning | Communication between slaver CPU and master CPU abnormal | |
| | I10 | HmiComWarning | HMI abnormal | |
| | I11 | FreqCalcConflictWarning | Frequency value abnormal | |
| | I12 | UnsetModel | Running model is not initial | • Contact with local distributor. |
| Outside Warnning | J01 | MeterComWarning | Meter/CT abnormal | • Check the smart meter model, connection or connectors are correct, any loose.<br>• if abnormal, repair or change.<br>• Power off, then restart (Ref. Chapter8).<br>• If those faults occurs continuously and frequently, please ask help for local distributors. |
| | J02 | MeterConnectWarning | Wires connecting type of meter wrong | • Check Meter/CT connection, installed place, and installed direction.<br>• if abnormal, re-installation.<br>• Power off, then restart (Ref. Chapter8).<br>• If this those faults continuously and frequently, please ask help for local distributors. |
| | J03 | SohWarning | Battery SOH low | • Contact with Battery manufacturer. |
| | J04 | GndAbnormalWarning | Earth impedance over by cable loose and so on | • Check earth line connection or earth connecting impedance.<br>• if abnormal, then adjust it.<br>• Power off, then restart (Ref. Chapter8).<br>• If this those faults continuously and frequently, please ask help for local distributors. |
| | J05 | ParallelComWarning | Communication between master inverter and slaver ones abnormal in parallel mode | • Check parallel connect communi-cation wires damage, connectors loose, connect port correct or not.<br>• if not, then adjust it.<br>• Power off, then restart (Ref. Chapter8).<br>• If this those faults continuously and frequently, please ask help for local distributors. |

# Other Useful Information

| PV Input | | | | |
|---|---|---|---|---|
| Reference | SSRSIH14K | SSRSIH14.6K | SSRSIH15K | SSRSIH16K |
| Factory Reference | IDL1PS-4K | IDL1PS-4.6K | IDL1PS-5K | IDL1PS-6K |
| Ppv Max (W) | 6000 | 6900 | 7500 | 9000 |
| Vmax PV (Vdc) (absolute Max.) | 550 | | | |
| Min. Operating Voltage (Vdc) | 100 | | | |
| Start-up Voltage (Vdc) | 100 | | | |
| MPPT voltage range (Vdc) | 80-500 | | | |
| Vdc range @ full power (Vdc) | 120 - 500 | 130-500 | 150-500 | 170-500 |
| Isc PV (absolute Max.) (A) | 26 x 2 | | | |
| Max. PV input current (A) | 18.5 x 2 | | | |
| Number MPP trackers | 2 | | | |
| Number input strings | 1/1 | | | |
| **Battery (charge/discharge)** | | | | |
| Battery type | Li-ion/Lead-acid | | | |
| Battery Normal Voltage (Range) (Vdc) | 51.2V (40-60V) | | | |
| Max charge/discharge Current (A) | 120 | | | |
| Max charge/discharge Power (W) | 4000 | 4600 | 5000 | 6000 |
| **AC Grid (input and output)** | | | | |
| Normal AC Voltage (V) | L/N/PE, 198 to 242 @ 220 / 207 to 253 @ 230 | | | |
| Frequency (Hz) | 50/60 | | | |
| Normal AC Current (A) | 18.2/17.4 | 21.0/20.0 | 22.8/21.8 | 27.3/26.1 |
| Max. cont. input/output current (A) | 19 | 22 | 23 | 28 |
| Rated Power (W) | 4000 | 4600 | 5000 | 6000 |
| Rated Apparent Power (VA) | 4000 | 4600 | 5000 | 6000 |
| Max. cont. Power (W) | 4000 | 4600 | 5000 | 6000 |
| Max. cont. Apparent Power (VA) | 4000 | 4600 | 5000 | 6000 |
| Power factor | 1.0 (- 0.8 - + 0.8 adjustable) | | | |
| Max. efficiency (%) | 97.6 | | | |
| **AC Load Output (Stand Alone)** | | | | |
| Normal Voltage (V) | L/N/PE, 198 to 242 @ 220 / 207 to 253 @ 230 | | | |
| Frequency (Hz) | 50/60 | | | |
| Nominal Current (A) | 18.2/17.4 | 21.0/20.0 | 22.8/21.8 | 27.3/26.1 |
| Max. cont. current (A) | 19 | 22 | 23 | 28 |
| Max. cont. Power (W) | 4000 | 4600 | 5000 | 6000 |
| Rated Apparent Power (VA) | 4000 | 4600 | 5000 | 6000 |
| Max. cont. Apparent Power (VA) | 4000 | 4600 | 5000 | 6000 |
| Power factor | 1.0 | | | |
| **Other** | | | | |
| Ingress protection (IP) | IP65 | | | |
| Protective class | Class I | | | |
| Temperature (°C) | -25°C to +60°C (Derating 45°C) | | | |
| Inverter Isolation | Non-isolated (PV-AC-BAT) | | | |
| Overvoltage category | OVC III (AC Main), OVC II (PV) | | | |
| Maximum altitude (m) | ＜4000 | | | |
| Relatively Humidity | 0-100% | | | |
| Noise Emission (dB) | < 25 | | | |
| Standby Consumption (W) | < 10 | | | |
| Weight (kg) | 20.5 | | | |
| Dimensions (W x H x D) (mm) | 370 x 535 x 192 | | | |

## Warranty returns

Should you for any reason need to return this product for a warranty claim, make sure to include all accessories with the product.

SVAN TRADING S.L.
Imported by B73737553
Av. Altos Hornos S/N. Pto. Sagunto (46520). Valencia, España.)
info@svanelectro.com
960600034

For an electronic copy of this manual, please contact our after sales support centre.