PROTECT YOUR WARRANTY

Read this manual carefully and keep it for future reference

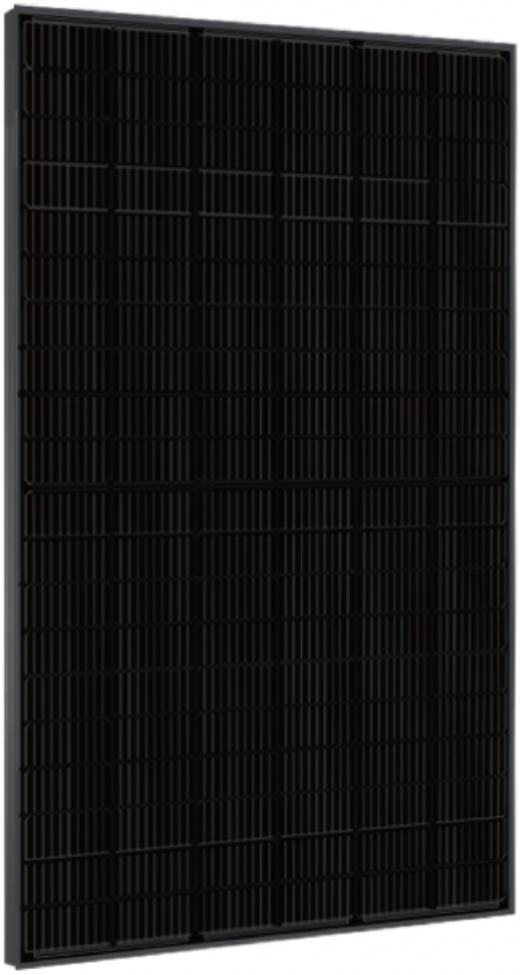

PV Module

User Manual

Reference: SSRSP041K/SSRSP046K/SSRSP054K/SSRSP066K

Contents

03 Important Safety Information

06 Product Overview

07 Installation

13 Other Useful Information

16 Installer Notes

Important Safety Information

IMPORTANT SAFETY INSTRUCTIONS
READ CAREFULLY AND KEEP FOR FUTURE REFERENCE

Read this manual thoroughly before first use, even if you are familiar with this type of product. The safety precautions enclosed herein reduce the risk of fire, electric shock and injury when correctly adhered to. Keep the manual in a safe place for future reference, along with the completed warranty card, purchase receipt and carton. If applicable, pass these instructions on to the next owner of the appliance.

Always follow basic safety precautions and accident prevention measures when using an electrical appliance, including the following:

WARNING: Electric shock hazard - professional installation only!

- This appliance must be professionally installed to an appropriately earthed wiring system by a licensed installer, following the instructions in this manual.
- Ensure to make these instructions available to the installer. Failure to install the appliance correctly could invalidate any warranty or liability claims.
- Alterations to the domestic wiring system must only be made by a qualified electrician. Failure to follow this advice may result in electric shock or death.

General usage conditions and restrictions

- **Installation location:** This solar is designed for outdoor use only.
- **Intended purpose:** Only use this solar module for its intended purpose, in its intended environment and as described in this manual. Any other use may cause fire, electric shock or injury.
- **Follow instructions:** Make sure to observe all rules and provisions in this manual. These instructions are not intended to cover every possible condition and situation. As with any product such as this, use common sense and caution when installing, operating and maintaining.

Electrical Safety

- **WARNING! High Voltage:** Any object - particularly a wet object - coming into contact with a high voltage power supply (directly or indirectly) can cause serious injury or death.
- **Tools:** When working with high voltage and AC power, be sure to only use the required, special-purpose tools.
- **Static electricity:** Any static electricity could damage veneer on the electrostatic sensitive components. Before touching the plug in, circuit board or chips, be sure to use correct electrostatic prevention measures.
- **WARNING! Power supply:** When installing or maintaining this solar module, the power supply must be disconnected first.

Important Safety Information (Cont.)

- **Solar module top:** Do not rest any items on top of the solar module.
- **CAUTION! Ambient temperature range:** The temperature range at which the solar module can be located is -20°C to +40 °C. Placing the module at temperatures outside of this range may cause damage to the module and/or its surroundings. Keeping the module outside of this temperature range may also harm the performance of the module or reduce the its life expectancy.
- **CAUTION! Operating temperature range:** The temperature range at which the solar module can be operated is -40°C to +85 °C. Use of the module outside of this temperature range may damage the performance of the module or may reduce its life expectancy.
- **CAUTION! Storage temperature range:** The temperature range at which the solar module can be stored is -40°C to +40 °C. Storage of the module outside of this temperature range may damage the performance of the module or may reduce its life expectancy.
- **WARNING! Hazardous Voltage:** The solar module system operates with hazardous voltages. Installation, maintenance and repairs must ONLY be carried out by qualified personnel.
- **WARNING! Disconnecting:** Before carrying out any kind of service and/or maintenance, disconnect the modules and verify that no current is present and no hazardous voltage exists.
- **WARNING! Authorised personnel:** Only certified electricians may replace solar modules and supervise operations. Unauthorized persons must be kept well away from the modules.
- **WARNING! Do not open or destroy solar modules.**
- **WARNING! Connection wire:** Do not cut the connection wire under the loading.
- **WARNING! Movement:** Do not modify the solar module, or move any labels or other parts.
- **WARNING! Chemicals:** Do not use chemicals on solar module surfaces.
- **WARNING! Concentrated Sunlight:** Do not expose solar modules to sunlight that is concentrated with mirrors, lenses or similar means.
- **WARNING! Local laws and regulations:** Solar module installation must adhere to local laws and regulations.
- **WARNING! Items:** Do not wear/use items - such as rings, metal jewelry, diamond jewelry or tools - which can scratch/damage the surface of module during the installation process.

Important Safety Information (Cont.)

- **WARNING! Water exposure:** Do not install PV modules in a location where they will be immersed in water or continually exposed to water from a sprinkler or fountain, etc.
- **WARNING! Angle of modules:** If solar modules (except for smart modules) as part of the same installation are mounted at different angles or orientations, then energy production can normally be optimized by connecting the different orientations to different inverters (or different MPPT if the inverter has more than one MPPT). Refer to inverter guidelines for further information.
- **Personell:** More than one person may be required to install this PV module. All personell must be licensed installers.
- **WARNING! Power tools:** Only use suitable power tools. Inspect power tools before using them
- **WARNING! Back side of module:** Keep the back side of solar module surfaces free of foreign objects
- **WARNING! Covering the module:** Completely cover solar module with opaque materials when wiring to halt productions of electricity.
- **WARNING!** This appliance is intended for domestic use only !
- **WARNING! Do not install or handle modules when they are wet or during periods of high wind.**

Product Overview

Power Module

Solar Photovoltaic modules consist of a series of electrically interconnected crystalline silicon solar cells, which are permanently encapsulated between a tempered glass superstrate and substrate. The entire laminate is secured within an anodized aluminum frame for structural strength, ease of installation and to protect the cells from the most severe environmental conditions (Fig. 1).

Fig. 1

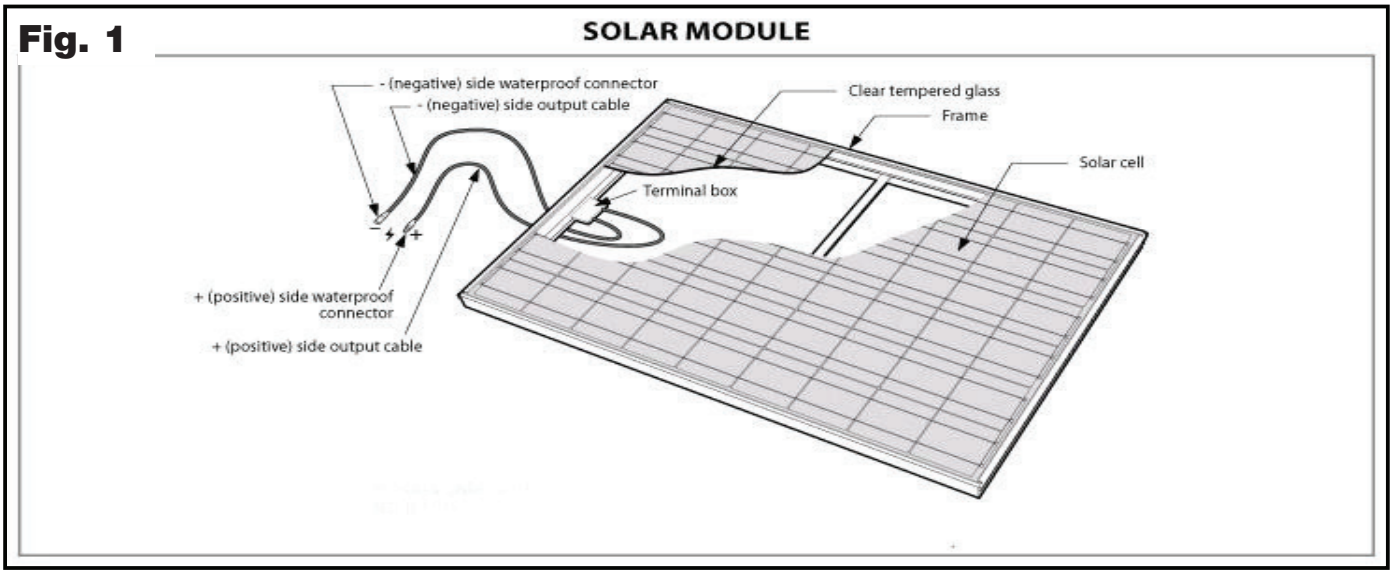

Note：The illustration is a reference image, your divice may differ.

Applications

PV modules are a highly reliable, virtually maintenance-free direct current (DC) power sources, designed to operate most efficiently in sunlight.

The application level of this photovoltaic module is class II: hazardous voltage, dangerous use power (higher than 240W). Our photovoltaic modules are tested with IEC 61215-1(ed.1), IEC 61215-1-1(ed.1), IEC 61215-2(ed.1), IEC 61730-1(ed.2) and IEC 61730-2(ed.2).

Installation

Before Installation

Before installing your system, you may need to contact local authorities to determine any necessary permits, as well as installation and inspection requirements. **This unit must only be installed by a certified electrician or installer, with experience installing this type of system.** This unit may need mutiple people to install it safetly. Ensure any power tools used are working properly, and are appropriate to use on this unit.

Climate Conditions

Only install these modules in the following conditions:

Ambient temperature:	-20°C to +40 °C
Operating temperature:	-40°C to +85 °C
Storage temperature:	-40°C to +40 °C
Humidity:	Below 85%RH
Maximum altitude:	2000 m
Fire safety class:	Class C according to UL 790
Corrosion resistance:	Except for corrosive salt area and sulfurous areas.
Mechanical load tolerance:	2400Pa / 1600Pa, with a safety factor of 1.5.

Location Conditions

- Whenever possible, install this unit so that it is directed towards the equator. Installations facing east and west are also possible, although the amount of power generated will be lower.
- Install in a location that has good sun exposure throughout the year. Less power is generated in shaded locations.
- The output of a series string of solar modules is connected to the input of the inverter. Always install solar modules so that all elements of the array receive the same amount of sunlight.
- It may not be possible to install solar modules in regions where the maximum snow accumulation exceeds the maximum allowable load.

Other Considerations

- Artificially concentrated sunlight shall not be directed on the module.
- Rated electrical characteristics are within 10 percent of measured values at Standard Test Conditions of: 1000 W/m², 25 °C cell temperature and solar spectral irradiance per ASTME 892 or irradiation of AM 1.5 spectrum.

Installation (Cont.)

- Under normal conditions, a photovoltaic module is likely to experience conditions that produce higher current and/or voltage than reported at standard test conditions. Accordingly, the values of Isc and Voc. marked on this PV module should be multiplied by a factor of 1.25 when determining component voltage ratings, conductor current ratings, and size of controls (e.g. inverter) connected to the PV output.
- The maximum voltage of the system must be less than the maximum certified voltage 1500V DC typically and the maximum input voltage of the inverter and of the other electrical devices installed in the system. To ensure that this is the case, the open circuit voltage of the array string needs to be calculated at the lowest expected ambient temperature for the location. This can be done using the following formula.

Max System voltage ≥ 1.25 * N * Voc * [1 + TCvoc x (Tmin-25)]

Where:

N	No. modules in series
Voc	Open circuit voltage of each module (refer to product label or data sheet)
TCvoc	Thermal coefficient of open circuit voltage for the module (refer to data sheet)
Tmin	The lowest ambient temperature

Important Installation Warnings and Safety Information!

- This system must be installed only by a suitably certified electrician or installer.
- Each solar module has a junction box, can provide cable according to customer's requirement. Installers must know the possible danger of death or serious bodily injury.
- Keep the back side of solar module surfaces free of foreign objects
- Completely cover solar module with opaque materials when wiring to halt productions of electricity.

Mounting the Solar Module

The module frame is made of anodized aluminum, and therefore corrosion can occur if the modules is subject to a salt water environment with contact to a rack of another type of metal (Electrolysis Corrosion). If required, PVC or stainless-steel washers can be placed between the module frame and support structure to prevent this type of corrosion.

Installation (Cont.)

Module support structures that are to be used to support modules at correct tilt angles should be wind and snow load rated for use by the appropriate local and civil codes prior to installation.

This module can be mounted as following:

- Use the corrosion-proof screws (M8) in the existing installation holes in the module frame (Fig. 2).

Fig. 2

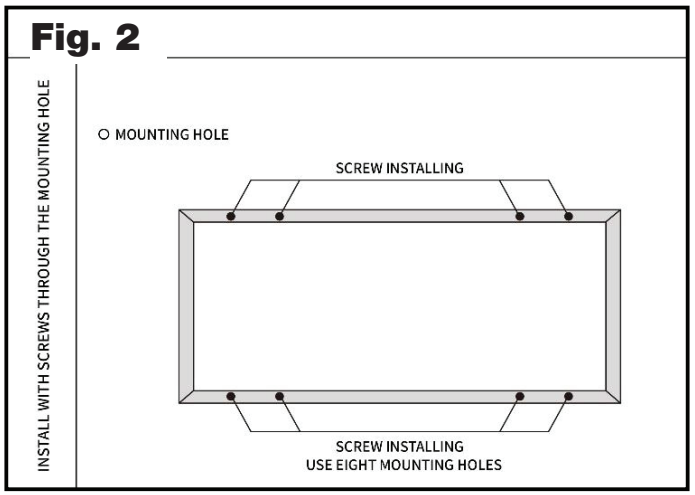

Note：The illustration is a reference image, your divice may differ.

- Use the 8 mounting holes (12mm*9mm) in the frame of each module to secure the modules to supporting structure.
- Attach the module frame to a supporting structure using M8 stainless steel hardware together with spring washers and flat washers in eight places symmetrically on the module. (Fig. 3).
- The applied torque should be about 8 Newton-meters.

Fig. 3

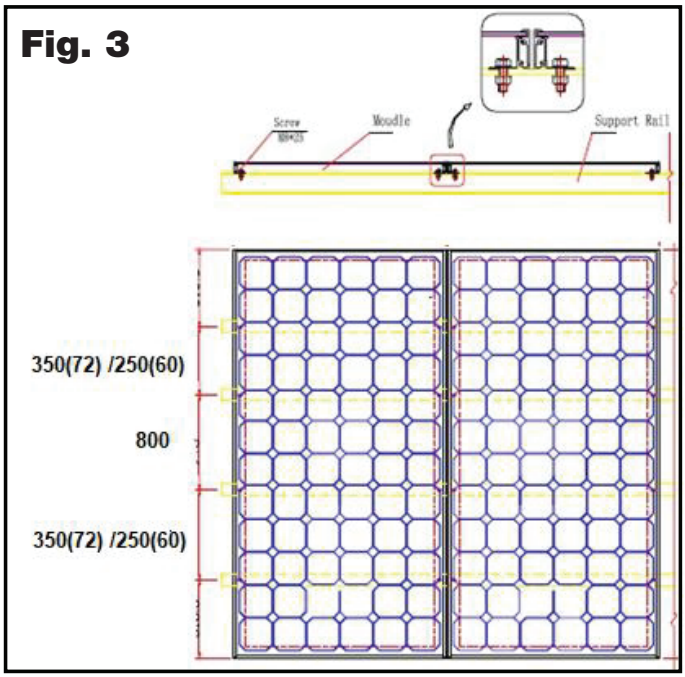

Note：The illustration is a reference image, your divice may differ.

Installation (Cont.)

- It is not permitted to modify the module frame under any circumstances. The recommended distance between two solar modules is 5mm, to account for linear thermal expansion of the module frames.
- Clearance between the module frame and mounting surface may be required to prevent the junction box from touching the surface, and to circulate cooling air around the back of the module.

Grounding the system

- All module frames and mounting racks must be properly grounded in accordance with the appropriate respective national electrical code.
- Proper grounding is achieved by connecting the module frame(s) and structural members contiguously one to another using a grounding clips conductor (Fig. 4).
- The grounding conductor or strap may be copper, copper alloy, or other material acceptable for use as an electrical conductor per respective National Electrical Codes.
- The grounding conductor must then make a connection to earth using a suitable earth ground electrode.
- Attach a separate conductor as grounding wire to one of the 4 mm diameter grounding marked ⏚ on the module frame with a set of M4 screw, cup washer, flat washer, tooth washer, and M4 nut. This is to ensure positive electrical contact with the frame (Fig. 5).

Fig. 4

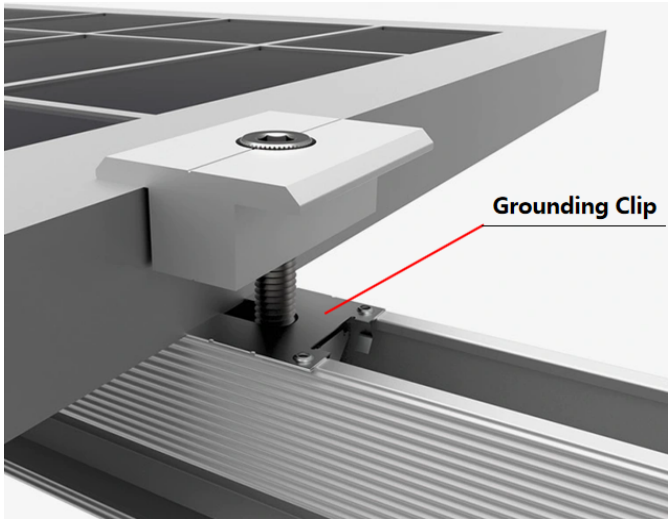

Fig. 5

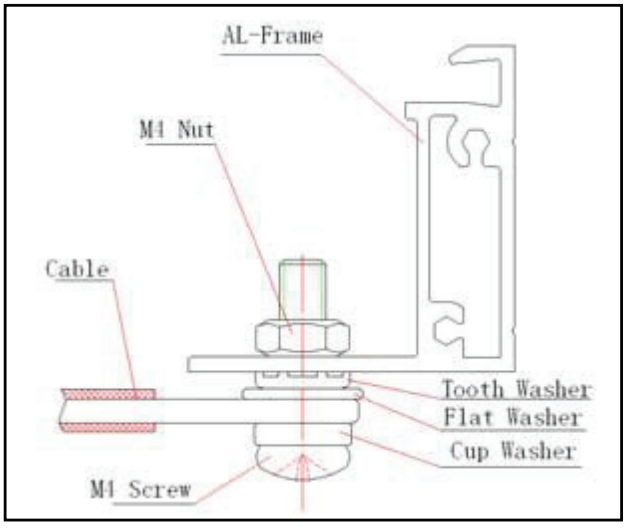

Note：The illustration is a reference image, your divice may differ.

Installation (Cont.)

Fig. 6

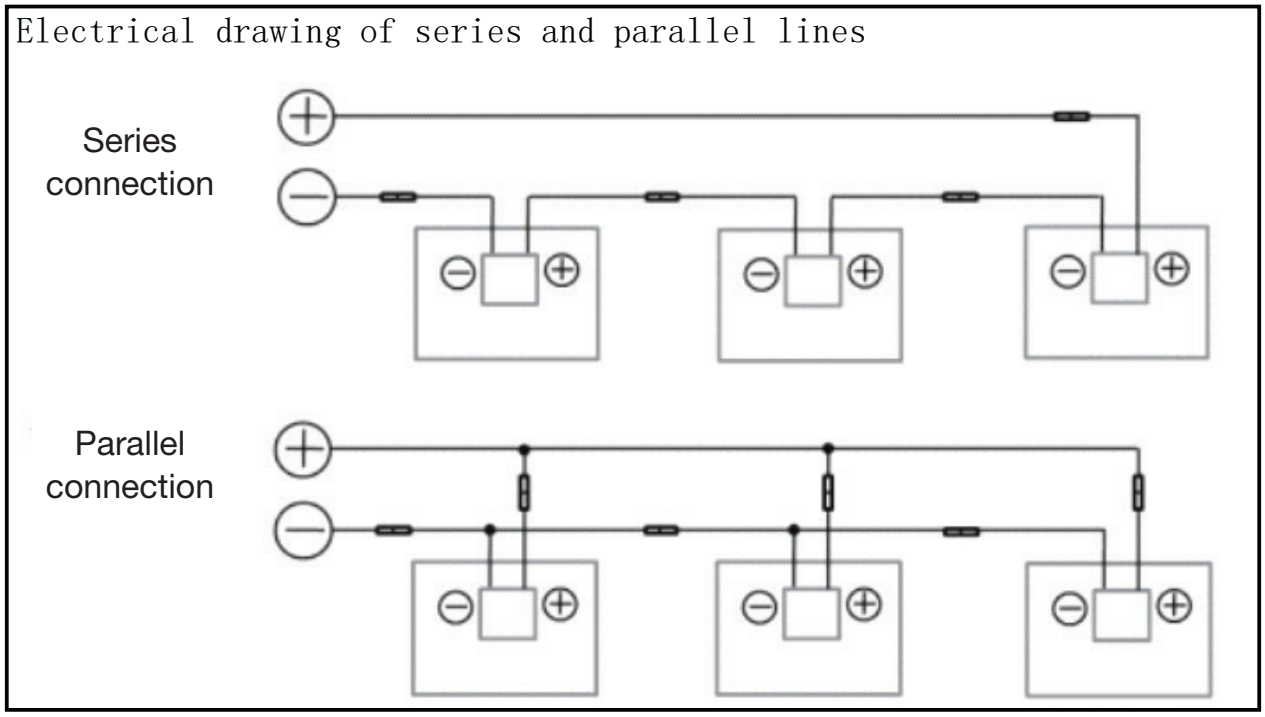

Note：The illustration is a reference image, your divice may differ.

Connections

- The maximum number of PV modules that can be connected in a series string must be calculated in accordance with applicable regulations in such a way that the specified maximum system voltage of the PV module and all other electrical DC components will not be exceeded in open-circuit operation at the lowest temperature expected at the PV system location.
- An appropriately rated overcurrent protection device must be used when the reverse current could exceed the value of the maximum fuse rating of the module. An over current protection device and anti-reflection diode module are required for each series string if more than two series strings are connected in parallel. Reverse polarity is forbidden.

Installation (Cont.)

Connecting the cable(s)

- The cable must not be bent or crushed on the direct exit of the cable screw joint include connecter and junction box. The minimum bending radius cables should be 43mm (1.69 in) (Fig. 7).
- The cable must be routed in a way that tensile stress on the conductor or connections is prevented.
- For field connections, use at least 4mm^2 copper wires insulated for a minimum of 90 °C and sunlight resistance with insulation designated as PV Wire.
- The cable must meet the standards outlined in EN 50618.

Fig. 7



Note：The illustration is a reference image, your divice may differ.

- There is a cable (+) and a cable (-) on the rear side of each solar module. Connect the waterproof connectors on these cables, making sure to push the connectors all the way in (Fig. 8).

Fig. 8

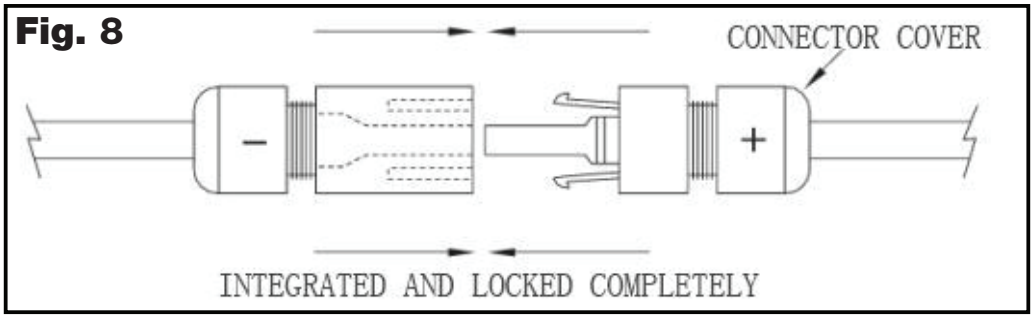

Note：The illustration is a reference image, your divice may differ.

- On the first solar module, connect the positive home run cable to the positive array output cable, and connect the negative cable to the positive cable of the second solar module.
- On the second solar module, connect the negative cable to the positive cable of the third solar module.
- Continue until you have series connected the appropriate number of modules for the desired voltage.
- When you have made direct connections between the specified number of solar modules, use a digital multimeter to measure the voltage and current output of the array.
- Organize the cables between solar modules.

Other Useful Information

Maintenance Instructions

- Do not clean the modules without professional authorization, and ensure the appropriate facilities to conduct security operations and aerial work with high-altitude awareness of the danger.
- Check the glass for cracks and damage before cleaning the module. If the modules have been broken, do not clean them, and immediately inform the installer or maintainer.
- Do not use cleaning fluids containing harsh chemicals, or abrasive detergent or disinfectant.
- The modules must be kept clean, as serious pollution will reduce the output power.
- We recommend using water to clean modules. If there is a lot of stubborn dirt, a mild soapy water and neutral disinfectant is recommended.
- If necessary, use a soft sponge or cloth to wipe the modules. Ensure you not press down on or scratch the modules. Scratches can cause power attenuation and void your warranty policy.
- When the module is titled at an angle of more than 15 degrees, the modules can self-clean naturally; when the the angle is less than 15 degrees, regular cleaning is necessary.
- Regularly inspect the mounting brackets for corrosion. If you find any evidence of corrosion, please consult the installers.
- Regularly check the integrity of the ground terminal, but DO NOT try to change the electrical connection. If you find - or suspect that there is - a loose connection, please contact the installer.

Service and repair

If the solar module is damaged, **do not attempt to repair it yourself.** There are no spare parts available for purchase. Only a certified electrcian familiar with this type of unit should service or repair this solar module.

Other Useful Information (Cont.)

Performance								
Reference	SSRSP041K		SSRSP046K		SSRSP054K		SSRSP066K	
MFactory Reference	ID-PV410		ID-PV460		ID-PV540		ID-PV660	
Test Conditions	STC	NMOT	STC	NMOT	STC	NMOT	STC	NMOT
Maximum Power (W)	410	308.9	460	346.5	540	406.8	660	500.2
Short-circuit Current (A)	13.85	11.19	13.85	11.19	13.70	11.07	18.44	14.90
Open-circuit Voltage (V)	37.6	35.1	42.0	39.3	49.8	46.5	45.6	42.7
Maximum Power Current (A)	13.02	10.61	13.0	10.61	12.86	10.49	17.42	14.12
Maximum Power Voltage (V)	31.5	29.1	35.4	32.7	42.0	38.8	37.9	35.4
Module Efficiency (%)	21.00		21.25		20.90		21.25	
Max. over-current Protection Rating (A)	25		25		25		30	
Power Tolerance (W)	0~ +5							
Measuring Uncertainty of Pm (%)	0~ ±5							
Maximum System voltage (V)	1500							
General								
Junction Box	IP68							
Frame	Anodised Aluminium							
Cable	4 mm^2 +300,-300 mm Length can be customized							
Fire Class Rating	Class C according to UL 790							
Connector(Model/Brand)	PV-TT02/Chuangda; PV-ST101/Hengda; PV-ZPJ030A/40th Institute							
Operating Temperature (°C)	-40 to +85							
Snow Load (pa)	5400							
Standards	IEC 61215 & IEC 61730 & ISO9001							
Dimensions (mm)	1722 x 1134 x 30		1909 x 1134 x 35		2278 x 1134 x 35		2384 x 1303 x 35	
Weight (kg)	21.5		24.5		29.0		34.5	
Temperature Characteristics								
NMOT(℃)	45 ± 2							
Temp Coefficient of VOC (%/ °C)	-0.27		-0.27		-0.27		-0.26	
Temp Coefficient of ISC (%/ °C)	+0.05		+0.05		+0.05		+0.04	
Temp Coefficient of Pmax (%/ °C)	-0.35		-0.35		-0.35		-0.34	

- STC (Standard Test Conditions): 1000 W/m^2 Irradiance, 25 °C Cell Temperature, AM 1.5.
- NMOT (Normal Module Operation Temperature): 800 W/m^2 Irradiance, 20 °C Ambient Temperature, Wind Speed 1 m/s.

Other Useful Information (Cont.)

The RCM Mark (Regulatory Compliance Mark) indicates that the product complies with the relevant guidelines of the ACMA as well as corresponding government requirements for the safety of electrical devices.

DOUBLE INSULATION

This symbol indicates that the unit has been designed in such a way that it does not require a safety connection to electrical earth (ground).

NOTE: Due to continued product improvement, images and illustrations in this manual may vary slightly from the product purchased. All images in this manual are for reference purposes only. Parts are not necessarily pictured to scale.

Responsible disposal





Packaging materials are recyclable. Please dispose of them responsibly for recycling.

At the end of its working life, do not throw this appliance out with your household waste. Electrical and electronic products contain substances that can have a detrimental effect on the environment and human health if disposed of inappropriately. Observe any local regulations regarding the disposal of electrical consumer goods and dispose of it appropriately for recycling.

Contact your local authorities for advice on recycling facilities in your area.

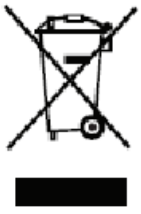

Dispose of packaging in an environmentally-friendly manner. This appliance is labelled in accordance with European Directive 2012/19/EU concerning used electrical and electronic appliances (waste electrical and electronic equipment -WEEE). The guideline determines the frame work for the return and recycling of used appliances as applicablethroughout to the EU.

PACKAGE INFORMATION: Packaging materials of the product are manufactured from recyclable materials in accordance with our National Environment Regulations.Do not dispose of the packaging materials together with the domestic or other wastes. Take them to the packaging material collection points designated by the local authorities.

Installer Notes

Installer Notes

Installer Notes

Installer Notes

Warranty returns

Should you for any reason need to return this product for a warranty claim, make sure to include all accessories with the product.

SVAN TRADING S.L.
Imported by B73737553
Av. Altos Hornos S/N. Pto. Sagunto (46520). Valencia, España.)
info@svanelectro.com
960600034

For an electronic copy of this manual, please contact our after sales support centre.

IM Version No: V2.0 Issue: Februrary 2024